VM410
Spare parts catalogue

Duun Industrier as
7630 Åsen, Norway
www.duun.no

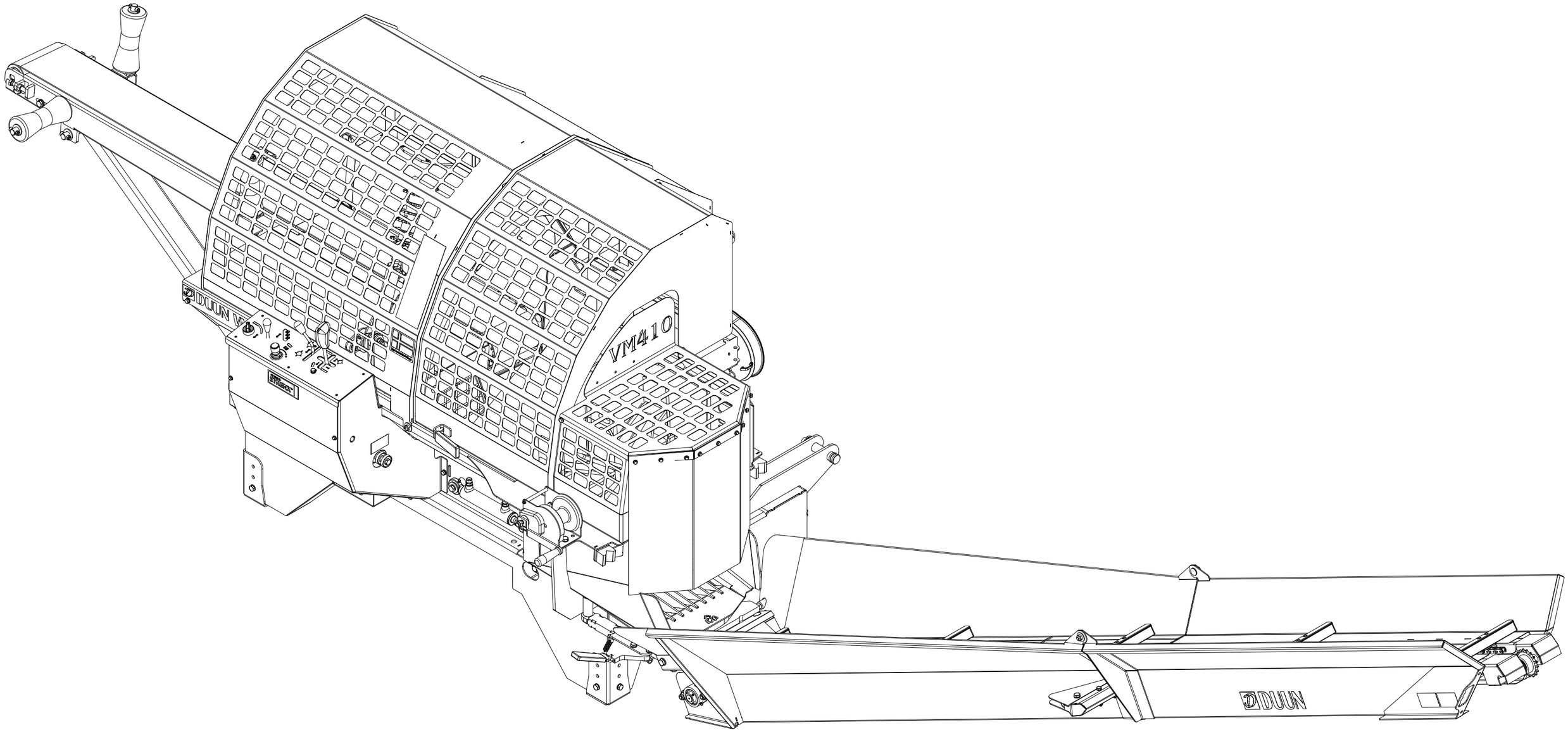

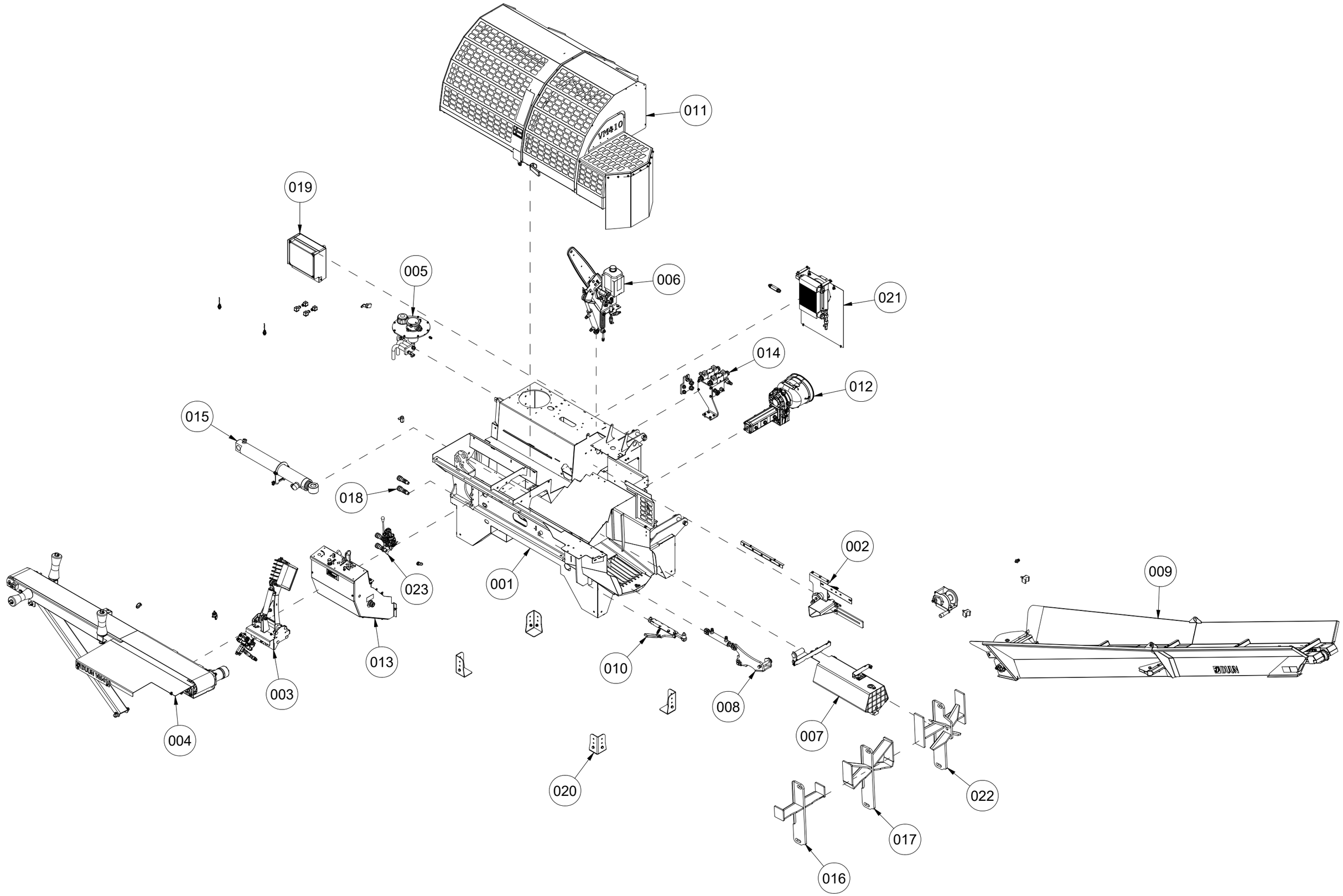
011
019
005
006
021
014
012
015
018
023
001
002
009
013
010
008
003
004
007
022
020
017
016

001 Chassis VM410

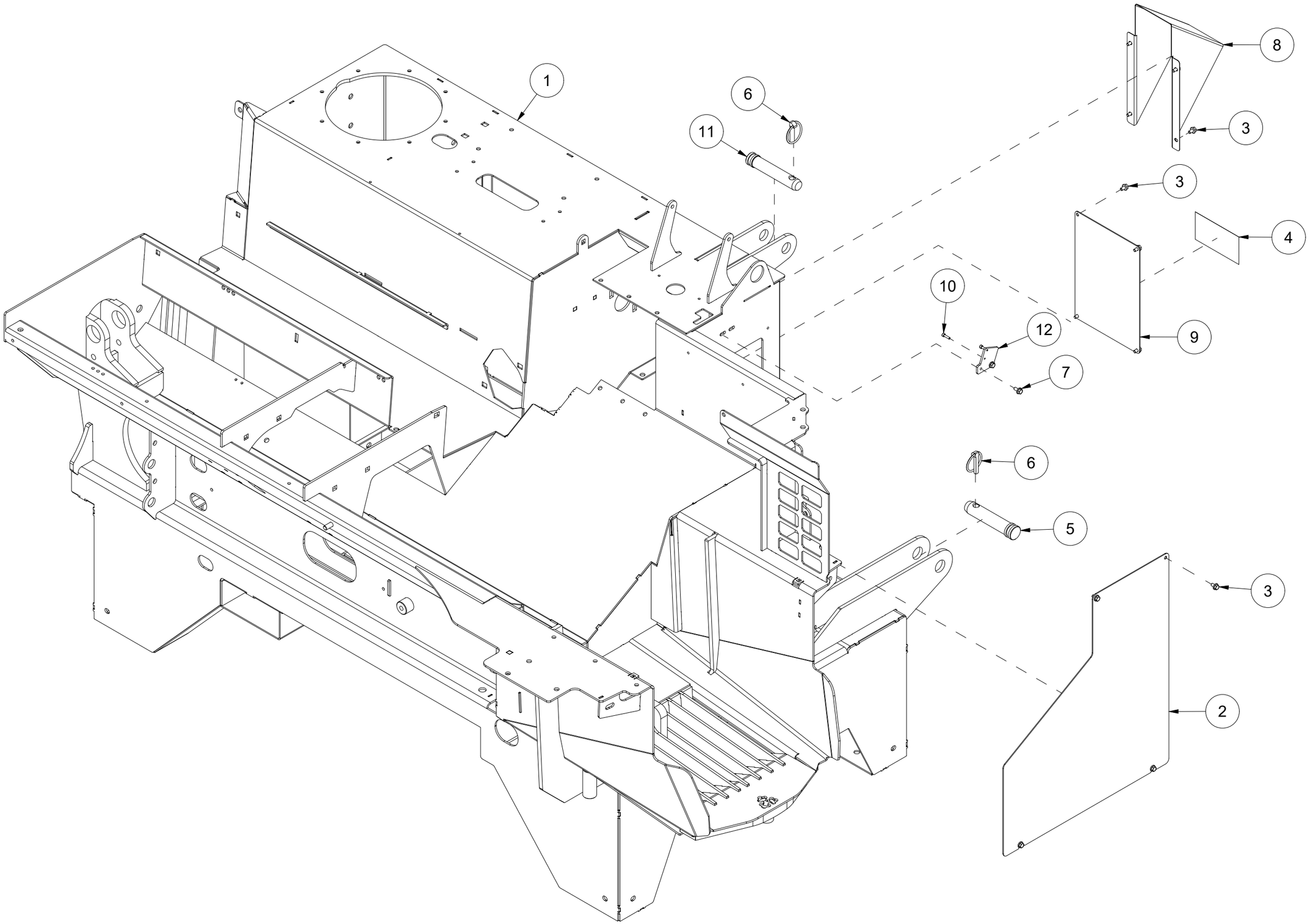

Pos	Qty	Article no	Designation
1	1	41331036	Chassis VM410 v2
2	1	41311105	Side cover
3	12	2451196	Hexagon screw witth flange M6x10 ElZn 8.8 DIN 6921
4	1	2935131	Adhesive label 132x72 400 rpm.
5	2	2551730	Drawbar bolt cat. 2 Ø28x95
6	3	2556142	Lynch pin Ø10x40
7	2	2451197	Hexagon screw witth flange M6x12 ElZn 8.8 DIN6921
8	1	41311121	Funnel
9	1	41311181	Cover
10	2	2477135	Unbrako cylinder screw M4x16 ElZn DIN 912
11	1	2526326	Top strut bolt cat. 2 Ø25,4x103
12	1	41311236	Safety switch plate

002 Log stopper VM410

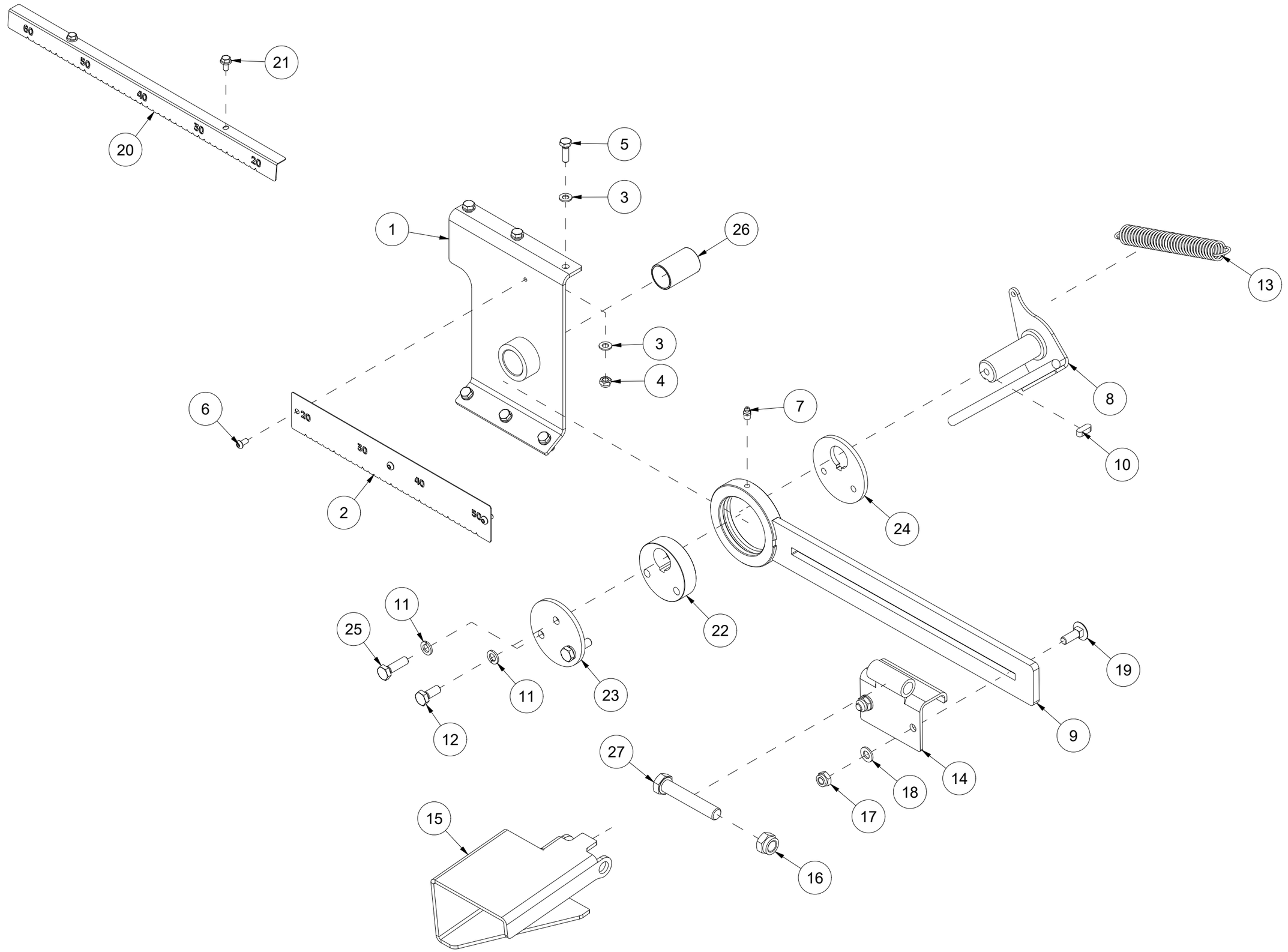

Pos	Qty	Article no	Designation
1	1	41311148	Bracket
2	1	41311144	Length indicator
3	12	2531047	Washer M8 ElZn DIN 125
4	6	2483609	Locking nut M8 ElZn DIN 985
5	6	2422246	Hexagon screw M8x25 ElZn 8.8 DIN 933
6	3	2476197	Unbrako round head screw M6x12 ElZn ISO 7380
7	1	2478407	Grease nipple, straight M8
8	1	41311027	Log stopper shaft
9	1	41311010	Log stopper holder
10	1	2115126	Cotter 8x7 L22 St DIN 6885A
11	3	2534060	Spring washer M10 ElZn DIN 127
12	1	2422297	Hexagon screw M10x25 ElZn 8.8 DIN 933
13	1	2913030	Extension spring Dt2,5 Dy25 L100 St
14	1	41311140	Bracket
15	1	41311141	Log stopper plate
16	1	2483613	Locking nut M16 ElZn DIN 985
17	2	2483610	Locking nut M10 ElZn DIN 985
18	2	2531060	Washer M10 ElZn DIN 125
19	2	2344331	Locking screw M10x30 ElZn 8.8 DIN 603
20	1	41311120	Length indicator
21	2	2451197	Hexagon screw with flange M6x12 ElZn 8.8 DIN6921
22	1	41311166	Eccentric
23	1	41311167	Steering plate
24	1	41311168	Steering plate
25	2	2422301	Hexagon screw M10x35 ElZn 8.8 DIN 933
26	1	2245230	Plastic bearing 30x34x52
27	1	2422501	Hexagon screw M16x90 ElZn 8.8 DIN 931

003 Log holder VM410

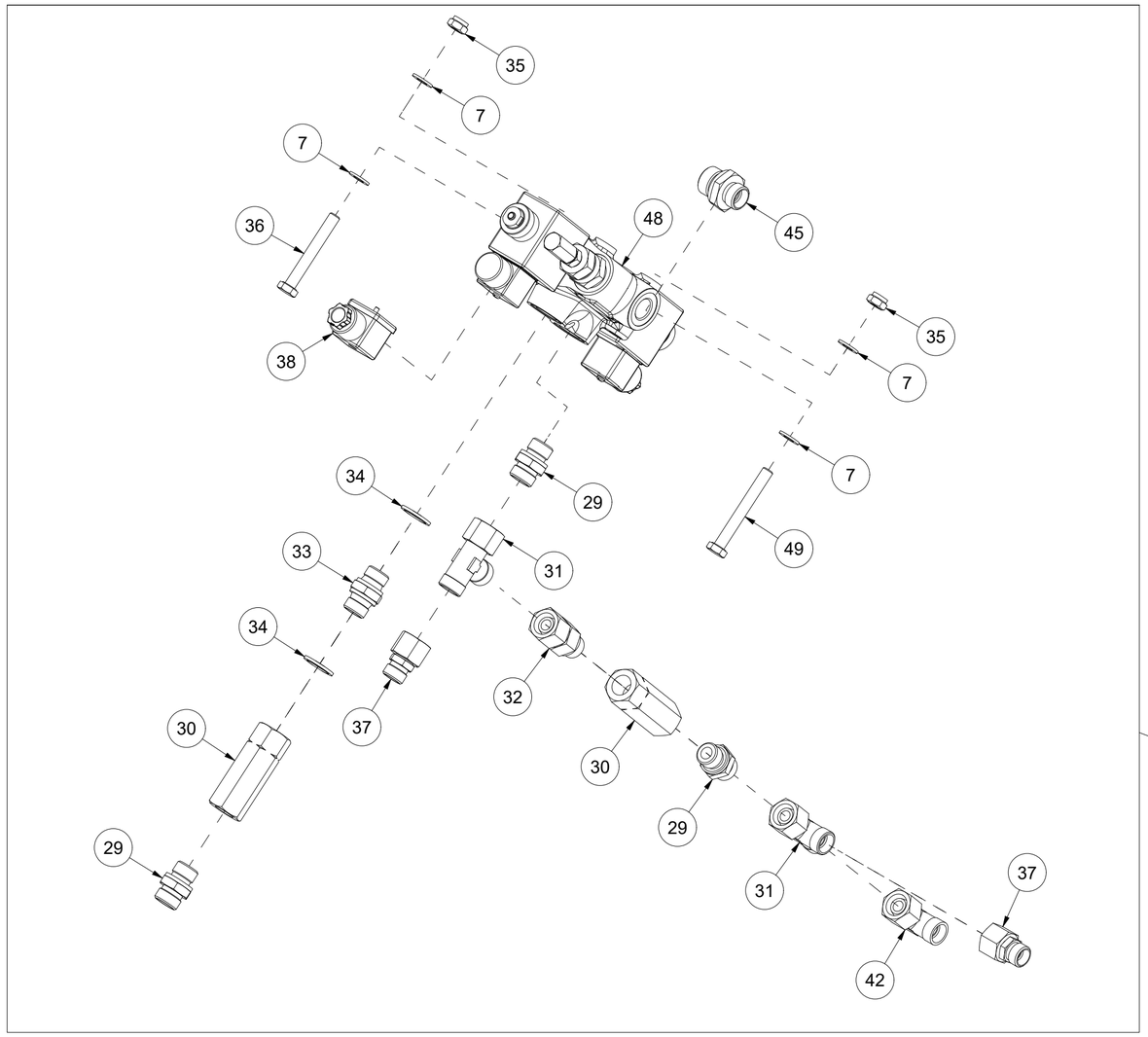

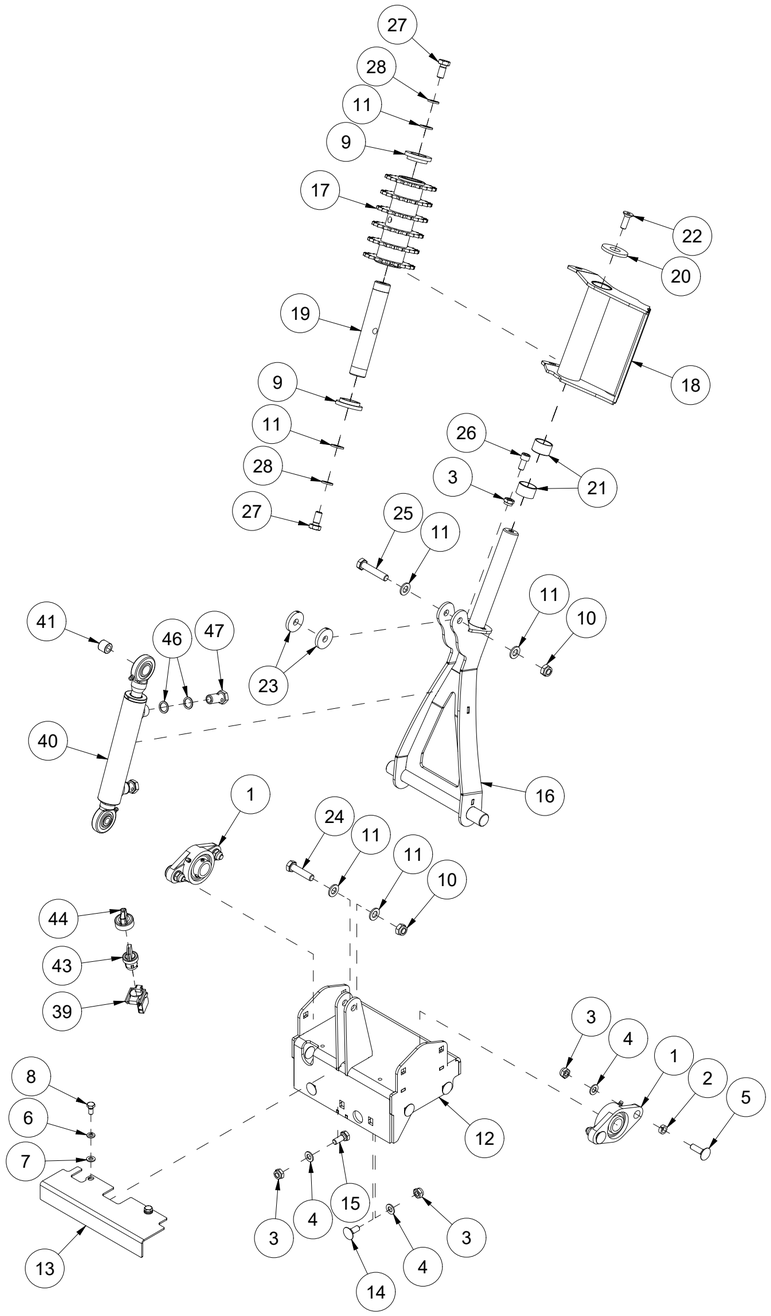

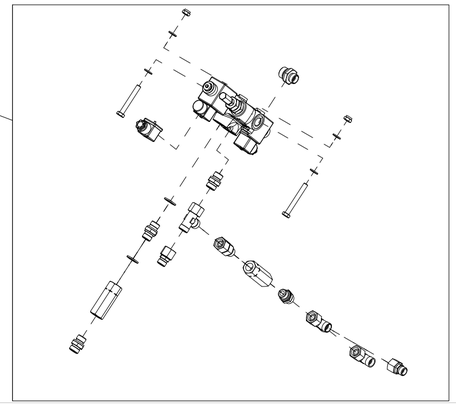

Pos	Qty	Article no	Designation
1	2	2954169	Flange bearing UCFL 205 25mm
2	4	41111067	Bushing
3	12	2483610	Locking nut M10 ElZn DIN 985
4	11	2531060	Washer M10 ElZn DIN 125
5	4	2344332	Locking screw M10x35 ElZn 8.8 DIN 603
6	2	2534047	Spring washer M8 ElZn DIN 127
7	6	2531047	Washer M8 ElZn DIN 125
8	2	2422240	Hexagon screw M8x16 ElZn 8.8 DIN 933
9	2	41201168	Plastic bearing Ø30/50x12
10	2	2483611	Locking nut M12 ElZn DIN 985
11	6	2531069	Washer M12 ElZn DIN 125
12	1	41331020	Bracket
13	1	41331025	Cover
14	6	2344330	Locking screw M10x25 ElZn 8.8 DIN 603
15	1	2422297	Hexagon screw M10x25 ElZn 8.8 DIN 933
16	1	41331021	Log holder arm
17	1	41331028	Log holder roll
18	1	41331027	Log holder
19	1	41331026	Bolt
20	1	41211150	Washer 12,5/50x6
21	2	2245228	Plastic bearing Ø30/34x20
22	1	2472299	Unbrako socket head screw M10x30 ElZn DIN 7991
23	2	26201038	Washer Ø12,5/40x6
24	1	2422356	Hexagon screw M12x50 ElZn 8.8 DIN 931
25	1	2422359	Hexagon screw M12x60 ElZn 8.8 DIN 931
26	1	2477295	Unbrako cylinder screw M10x20 ElZn DIN 912
27	2	2422346	Hexagon screw M12x25 ElZn 8.8 DIN 933
28	2	2534069	Spring washer M12 ElZn DIN 127
29	3	2957749	Hexagon nipple GEK BSP 3/8" L12 ED
30	2	2955331	Non-return valve 3/8" 0,5Bar
31	2	2957723	T-hexagon nipple EVLK 12L
32	1	2957748	Swivel nipple EVGE 12L BSP 3/8" ED
33	1	2957760	Hexagon nipple BSP 3/8" - 3/8"
34	2	2957890	Hydraulic gasket 3/8"
35	2	2483609	Locking nut M8 ElZn DIN 985
36	1	2422259	Hexagon screw M8x60 ElZn 8.8 DIN 931
37	2	2957511	Transition L12-L10
38	2	4311093	Valve cover with LED
39	1	4311042	Body element
40	1	2955015	Cylinder Ø32/20 SL125
41	2	41211239	Sleeve
42	1	2957722	T-hexagon nipple EVTK 12L
43	1	4311043	ZB4BD2 Schneider Turning head 2 fixed pos
44	1	4311044	Schneider ZBDD2 Protective cover
45	2	2957766	Hexagon nipple GEK BSP 1/2" L12 ED
46	4	2957868	Copper gasket 3/8
47	2	2957851	Banjobolt 3/8"
48	1	2955312	Directional valve 3/8"
49	1	2422260	Hexagon screw M8x65 ElZn 8.8 DIN 931

004 Feed table VM410

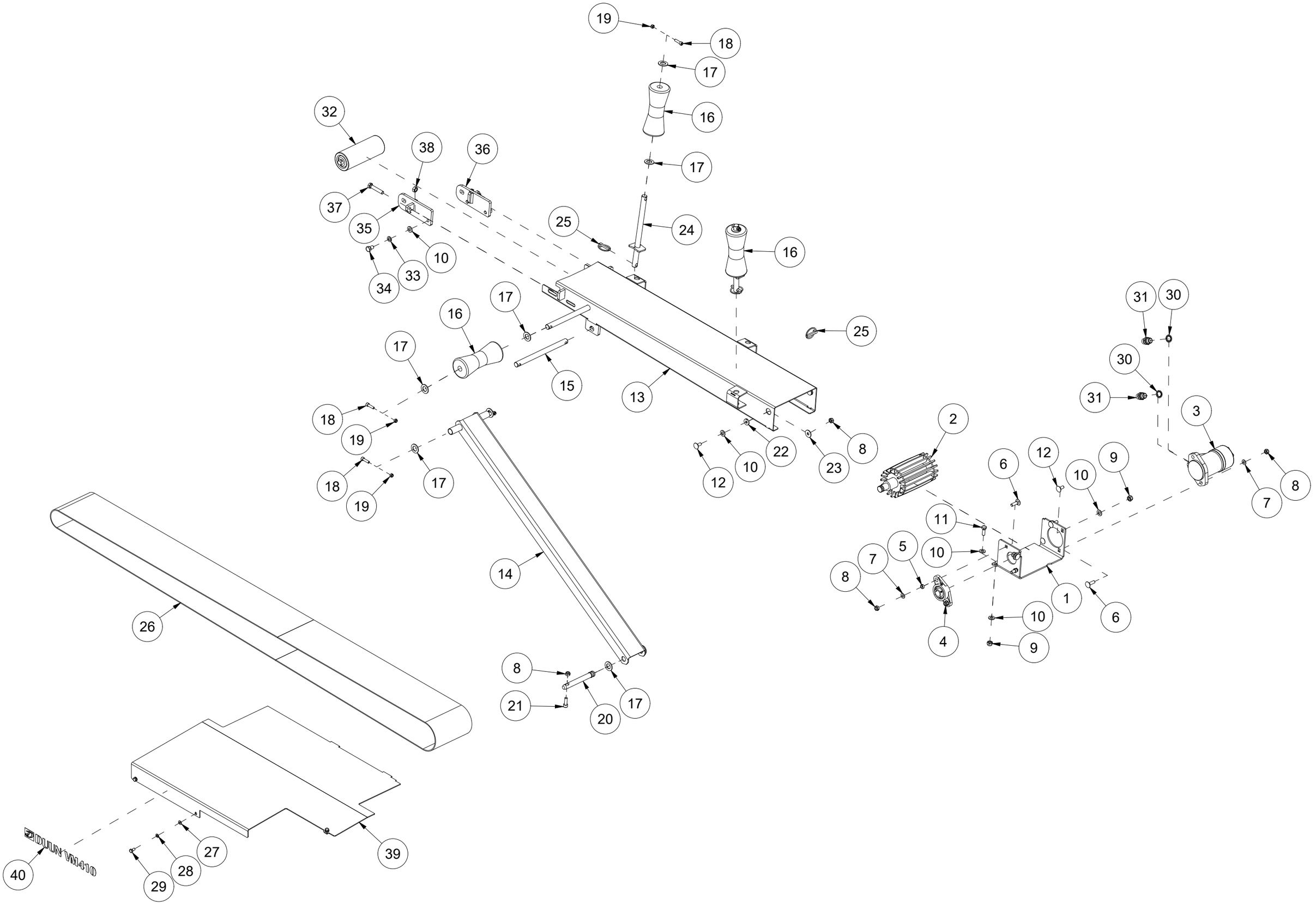

Pos	Qty	Article no	Designation
1	1	41311031	Bracket
2	1	41311045	Driving wheel
3	1	2955513	Hydraulic engine 315 ccm
4	1	2954169	Flange bearing UCFL 205 25mm
5	2	41111067	Bushing
6	4	2344332	Locking screw M10x35 ElZn 8.8 DIN 603
7	4	2531060	Washer M10 ElZn DIN 125
8	7	2483610	Locking nut M10 ElZn DIN 985
9	4	2483611	Locking nut M12 ElZn DIN 985
10	11	2531069	Washer M12 ElZn DIN 125
11	1	2422299	Hexagon screw M10x30 ElZn 8.8 DIN 933
12	5	2344330	Locking screw M10x25 ElZn 8.8 DIN 603
13	1	41311211	Feed table
14	1	41311044	Duct
15	1	41311082	Shaft
16	3	2245031	Support roller Ø60/84xL200
17	10	2531086	Washer M20 ElZn DIN 125
18	5	2477248	Unbrako socket head screw M8x30 ElZn DIN 912
19	5	2483609	Locking nut M8 ElZn DIN 985
20	1	2526323	Top strut bolt cat. 1 Ø19x121
21	1	2475299	Unbrako socket head screw M10x30 A4 DIN 912
22	2	41151031	Bearing washer
23	2	2533060	Body washer M10 ElZn DIN 9021
24	2	41201088	Roll holder
25	3	2556142	Linch pin Ø10x40
26	1	2222118	Band grip top B190 L4322
27	3	2531047	Washer M8 ElZn DIN 125
28	3	2534047	Spring washer M8 ElZn DIN 127
29	3	2422240	Hexagon screw M8x16 ElZn 8.8 DIN 933
30	2	2957861	Hydraulic gasket 1/2"
31	2	2957765	Hexagon nipple BSP 1/2" - 1/2"
32	1	2954326	Roll with bearings Ø76x200
33	4	2534069	Spring washer M12 ElZn DIN 127
34	4	2422344	Hexagon screw M12x20 ElZn 8.8 DIN 933
35	1	41321142	Bracket
36	1	41321143	Right bracket
37	2	2425360	Hexagon screw M12x65 ElZn 8.8 DIN 933
38	2	2481611	Hexagon nut M12 ElZn DIN 934
39	1	41331022	Machine table
40	1	2935190	Adhesive label VM410

005 Hydraulic tank VM410

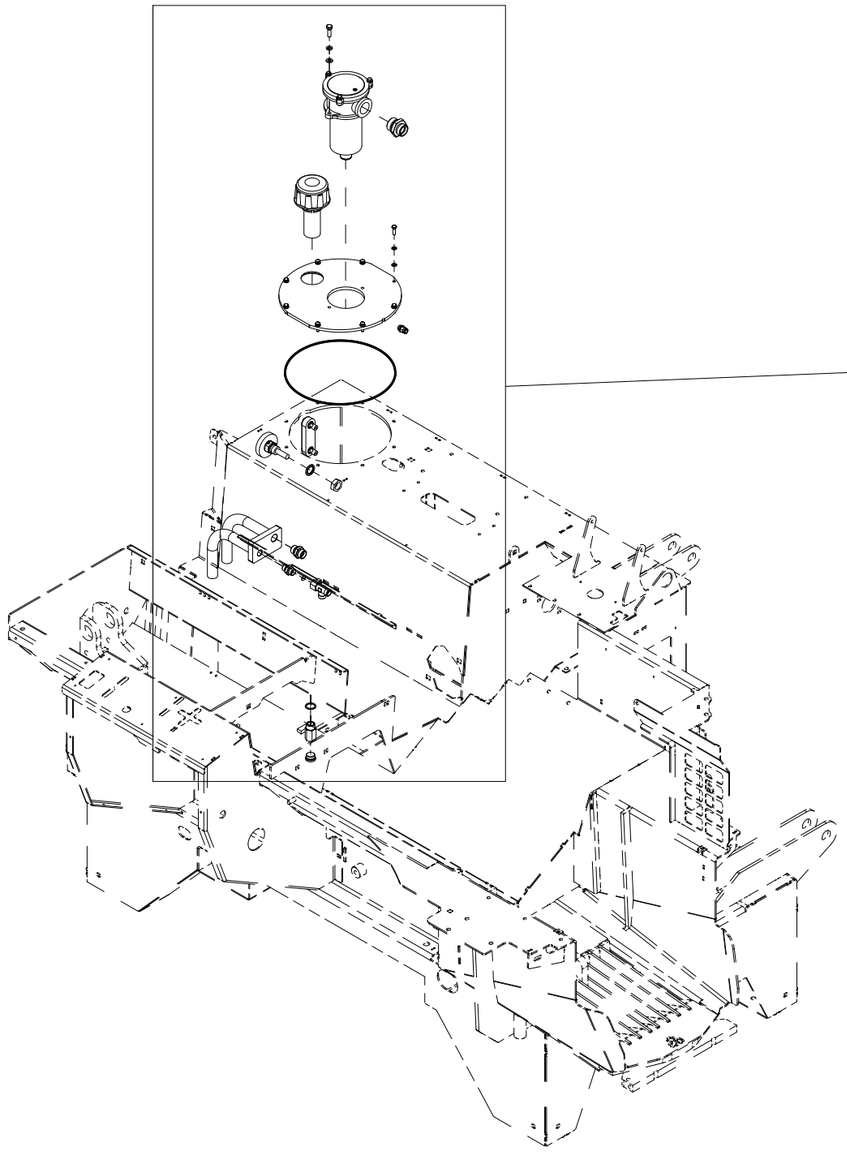

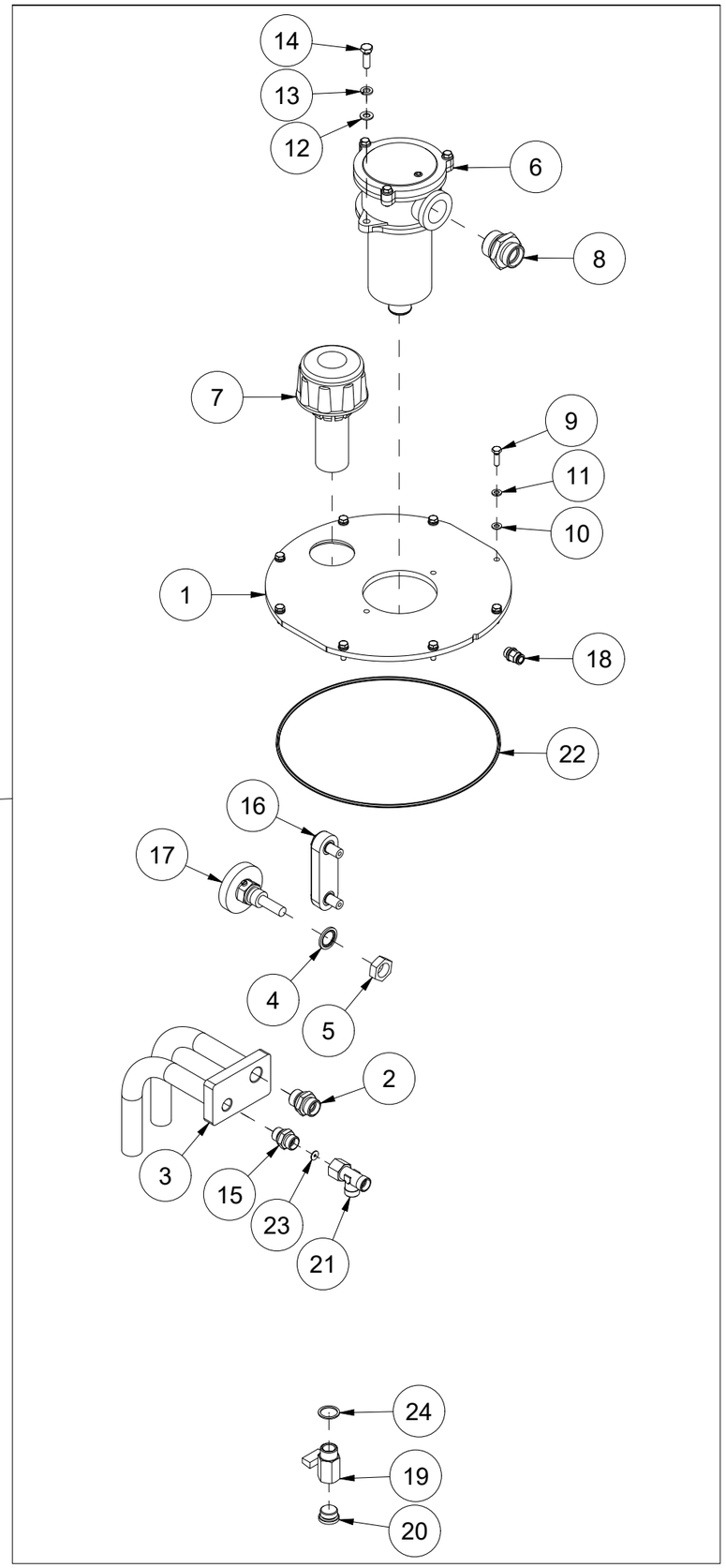

Pos	Qty	Article no	Designation
1	1	41311081	Tank cap
2	1	2957768	Hexagon nipple GEK BSP 1/2" L15 ED
3	1	41311074	Return pipe
4	1	2957861	Hydraulic gasket 1/2"
5	1	2482209	Nut 6kt.1/2" BSP flat galv.
6	1	2251064	Return filter
7	1	2931018	Filling cap
8	1	2957781	Hexagon nipple GEK BSP 1" L22 ED
9	8	2422205	Hexagon screw M6x20 ElZn 8.8 DIN 933
10	8	2531039	Washer M6 ElZn DIN 125
11	8	2534039	Spring washer M6 ElZn DIN 127
12	2	2531047	Washer M8 ElZn DIN 125
13	2	2534047	Spring washer M8 ElZn DIN 127
14	2	2422246	Hexagon screw M8x25 ElZn 8.8 DIN 933
15	1	2957749	Hexagon nipple GEK BSP 3/8" L12 ED
16	1	2957821	Sight glass M12 L-76mm
17	1	2957825	Thermometer
18	1	2957818	Flash fitting 8mm 1/4" straight
19	1	2957601	Ball valve mini 1/2" in/out threads
20	1	2957421	Plug 1/2" w/Gasket bross. chrome
21	1	2957723	T-hexagon nipple EVLK 12L
22	1	2233266	X Ring 266,29x3,53
23	1	41311176	Nozzle Ø3,2/12x1
24	1	41311237	Copper gasket Ø21/26x1,5

006 Saw VM410

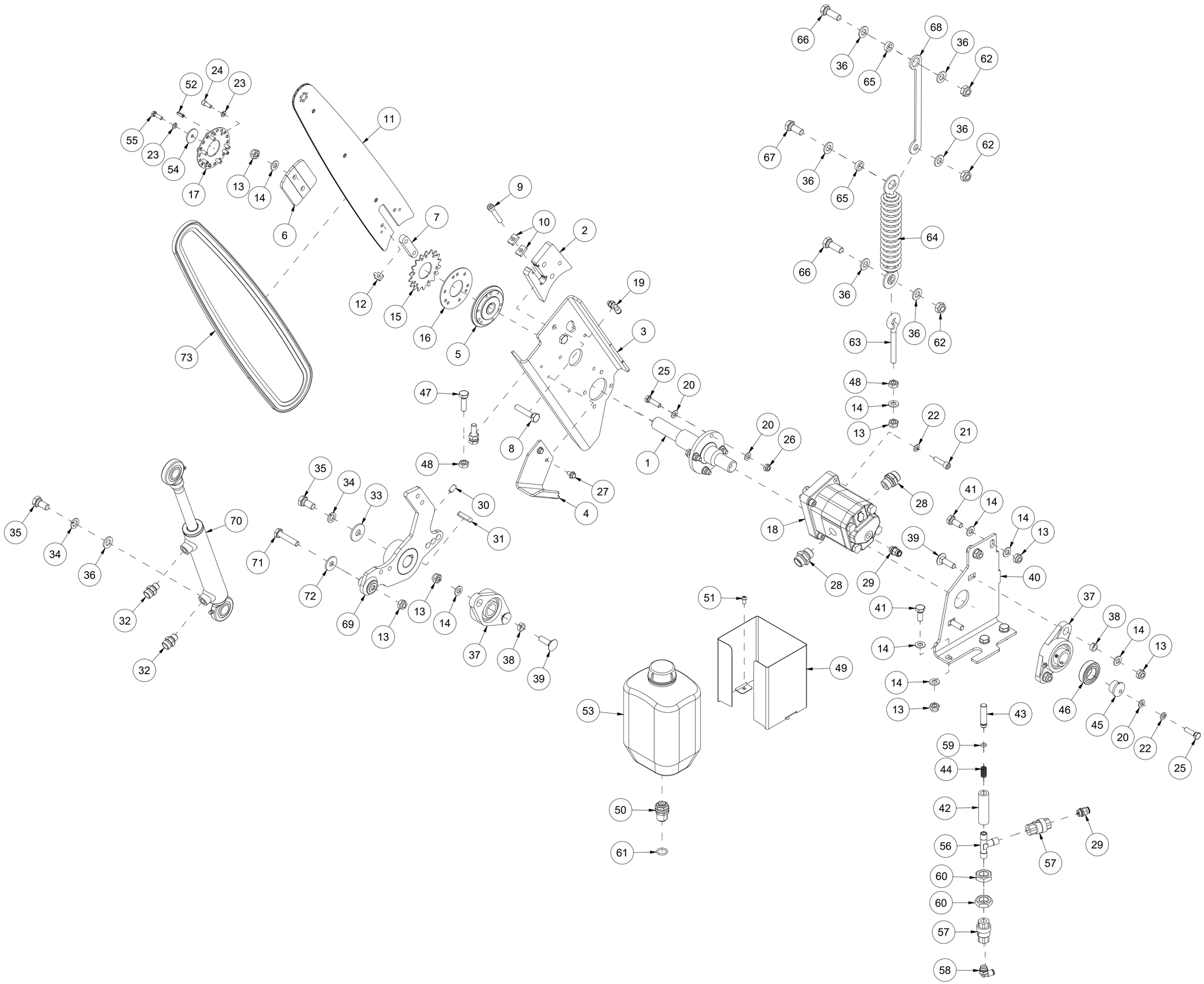

Pos	Qty	Article no	Designation
1	1	41311033	Saw shaft movement
2	1	41311015	Fixing block sword
3	1	41311024	Sword bracket
4	1	41311025	Sliding plate log stopper
5	1	41311156	Drive wheel saw chain
6	1	41121036	Clamp plate
7	1	41301095	Wedge
8	2	2425307	Hexagon screw M10x50 ElZn 8.8 DIN 933
9	1	2477256	Unbrako cylinder screw M8x50 ElZn DIN 912
10	2	41201205	Plate 13,5x20 Ø8,25
11	1	41331004	Saw bar 0,325" L563 with nose wheel
12	1	41201206	Tensioning tap
13	13	2483610	Locking nut M10 ElZn DIN 985
14	18	2531060	Washer M10 ElZn DIN 125
15	1	41301003	Middle drive wheel
16	1	41301001	Inner drive wheel
17	1	41301002	Outer drive wheel
18	1	2955564	Cog wheel motor GR2 8 ccm
19	1	2957814	Flash fitting 6mm 1/8" 90gr
20	9	2531047	Washer M8 ElZn DIN 125
21	4	2477248	Unbrako cylinder screw M8x30 ElZn DIN 912
22	5	2534047	Spring washer M8 ElZn DIN 127
23	7	2534039	Spring washer M6 ElZn DIN 127
24	6	2477200	Unbrako cylinder screw M6x16 ElZn DIN 912
25	5	2422248	Hexagon screw M8x30 ElZn 8.8 DIN 933
26	4	2483609	Locking nut M8 ElZn DIN 985
27	2	2451196	Hexagon screw with flange M6x10 ElZn 8.8 DIN 6921
28	2	2957768	Hexagon nipple GEK BSP 1/2" L15 ED
29	2	2957818	Flash fitting 8mm 1/4" straight
30	1	2473239	Threaded pin M8x16 St DIN 916
31	1	2115131	Cotter 8x7 L36 St DIN 6885A
32	2	2957756	Hexagon nipple GEK BSP 1/4" L12 ED
33	1	2533090	Body washer M12 ElZn DIN 9021
34	2	2534069	Spring washer M12 ElZn DIN 127
35	2	2422346	Hexagon screw M12x25 ElZn 8.8 DIN 933
36	7	2531069	Washer M12 ElZn DIN 125
37	2	2954169	Flange bearing UCFL 205 25mm
38	4	41111067	Bushing
39	4	2344332	Locking screw M10x35 ElZn 8.8 DIN 603
40	1	41311034	Sword holder bracket
41	5	2422297	Hexagon screw M10x25 ElZn 8.8 DIN 933
42	1	41201132	Cylinder
43	1	41201127	Piston
44	1	2912068	Extension spring Dt1,0 Di9,0 L45 St
45	1	41201190	Eccentric bushing
46	1	2951124	Ball bearing 6005 2RS 25x47x12 DIN 625
47	2	2422301	Hexagon screw M10x35 ElZn 8.8 DIN 933
48	3	2481610	Hexagon nut M10 ElZn DIN 934
49	1	41311084	Rack for chain oil tank
50	1	2957811	Bulkhead bushing Ø8,0
51	2	2476197	Unbrako round head screw M6x12 ElZn ISO 7380
52	3	2525203	Tension sleeve 6x16 St DIN 1481
53	1	41311085	2,5 l Plastic container
54	1	41201047	Washer Ø6,5/30x2
55	1	2422205	Hexagon screw M6x20 ElZn 8.8 DIN 933
56	1	2957500	Pipe connection T-piece BSP 1/4" ext.
57	2	2955330	Non-return valve ¼”
58	1	2957815	Flash fitting 6mm 1/4" 90gr
59	1	2233008	O-ring 8,00x2,00 NBR 70
60	2	2482615	Hexagon nut M20x1,5 ElZn DIN 936
61	1	2233018	O-ring 17,13x2,62 NBR 70
62	3	2483611	Locking nut M12 ElZn DIN 985
63	1	2478314	Eye bolt M10x80
64	1	2913041	Extension spring Dt5,38 Dy41 L240 A2
65	3	41311076	Washer Ø12,2/20x6
66	2	2422350	Hexagon screw M12x35 ElZn 8.8 DIN 933
67	1	2422348	Hexagon screw M12x30 ElZn 8.8 DIN 933
68	1	41331005	Extender
69	1	41211241	Saw arm
70	1	2955015	Cylinder Ø32/20 SL125
71	1	2422307	Hexagon screw M10x50 ElZn 8.8 DIN 931
72	1	2533060	Body washer M10 ElZn DIN 9021
73	1	2963134	Saw chain 85 links 0.325" division

007 Splitting ram VM410

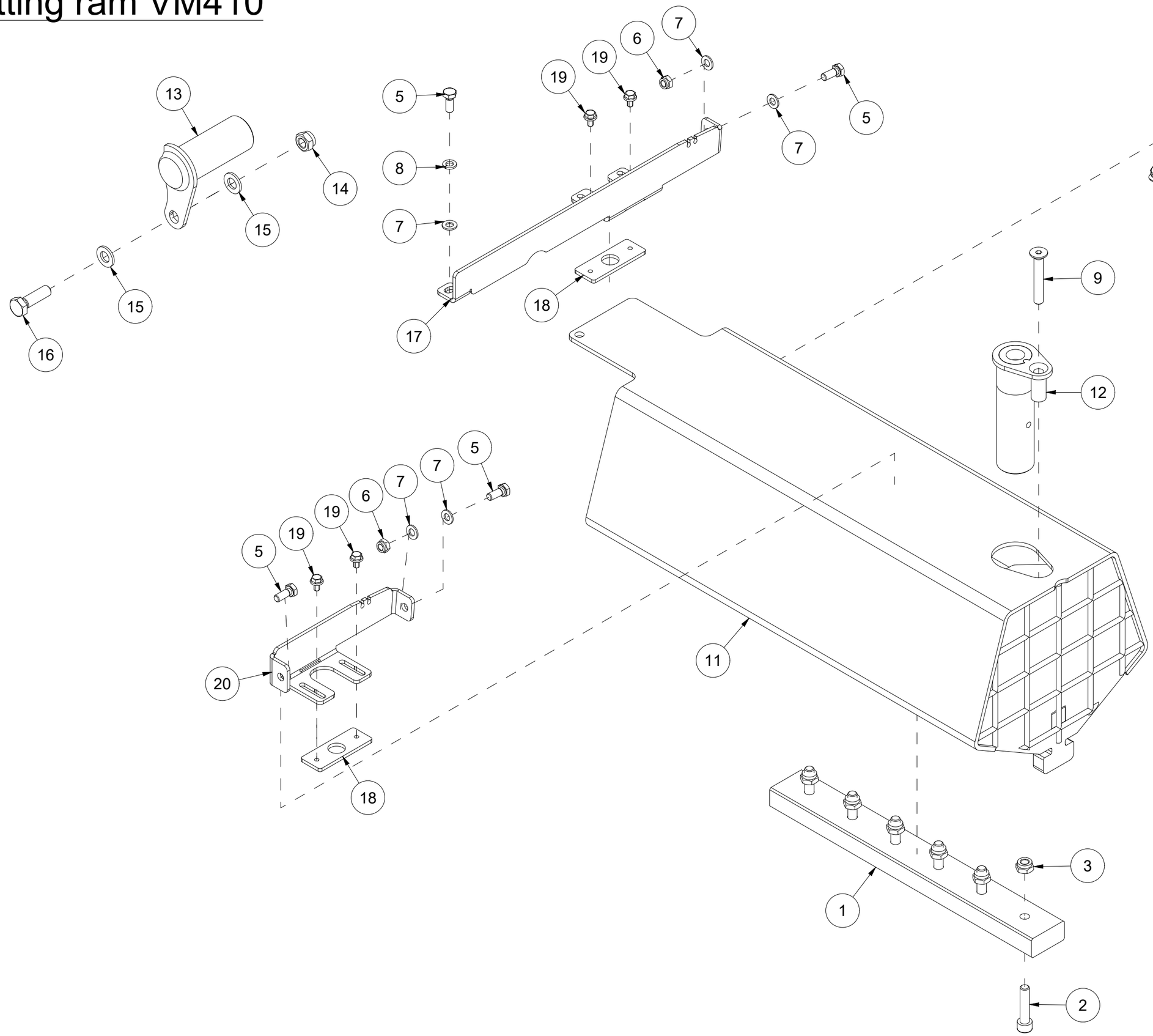

Pos	Qty	Article no	Designation
1	1	41311042	Slide
2	6	2471305	Unbrako socket head screw M10x45 St 12.9 DIN 912
3	6	2483610	Locking nut M10 ElZn DIN 985
4	1	41311157	Bracket
5	4	2422244	Hexagon screw M8x20 ElZn 8.8 DIN 933
6	2	2483609	Locking nut M8 ElZn DIN 985
7	6	2531047	Washer M8 ElZn DIN 125
8	2	2534047	Spring washer M8 ElZn DIN 127
9	1	2472311	Unbrako socket head screw M10x65 St 10.9 DIN 7991
10	2	2451196	Hexagon screw with flange M6x10 ElZn 8.8 DIN 6921
11	1	41331002	Splitting ram
12	1	41201208	Bolt
13	1	41331003	Bolt with ear
14	1	2483611	Locking nut M12 ElZn DIN 985
15	2	2531069	Washer M12 ElZn DIN 125
16	1	2422352	Hexagon screw M12x40 ElZn 8.8 DIN 933
17	1	41331019	Left side bracket sensor
18	2	41331017	Sensor plate
19	4	2465196	Hexagon screw Taptite with flange M6x10 ElZn 8.8
20	1	41331024	Right side bracket sensor

008 Hydraulic knife lift VM410

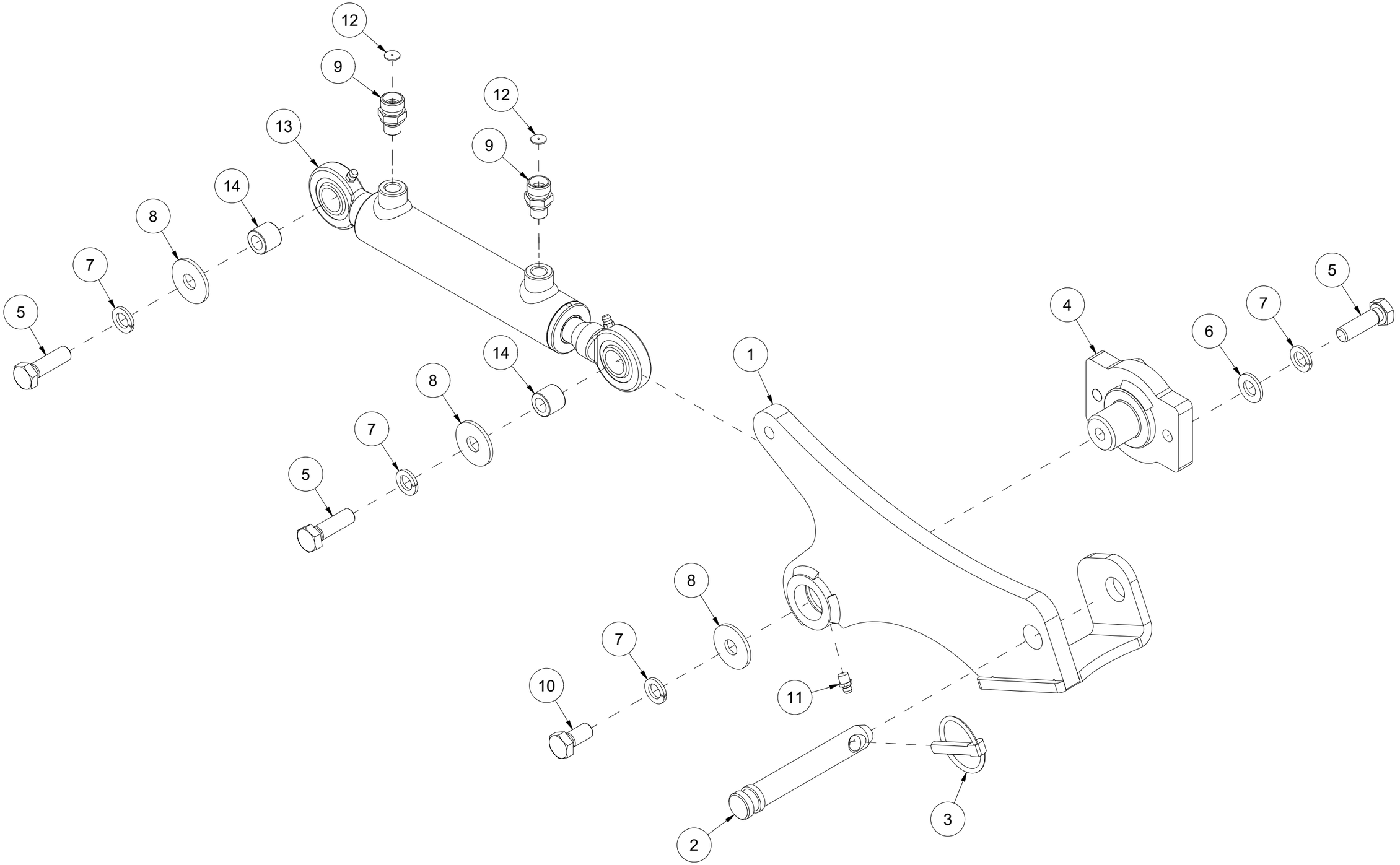

Pos	Qty	Article no	Designation
1	1	41311130	Lifting arm
2	1	2526322	Top strut bolt cat. 1 Ø19x97
3	1	2556142	Lynch pin Ø10x40
4	1	41311132	Fixing bracket
5	4	2422352	Hexagon screw M12x40 ElZn 8.8 DIN 933
6	2	2531069	Washer M12 ElZn DIN 125
7	5	2534069	Spring washer M12 ElZn DIN 127
8	3	2533090	Body washer M12 ElZn DIN 9021
9	2	2957756	Hexagon nipple GEK BSP 1/4" L12 ED
10	1	2422346	Hexagon screw M12x25 ElZn 8.8 DIN 933
11	1	2478407	Grease nipple, Straight M8
12	2	41311173	Nozzle ø1,5/12x1
13	1	2955015	Cylinder Ø32/20 SL125
14	2	41211239	Sleeve

009 Conveyor VM410

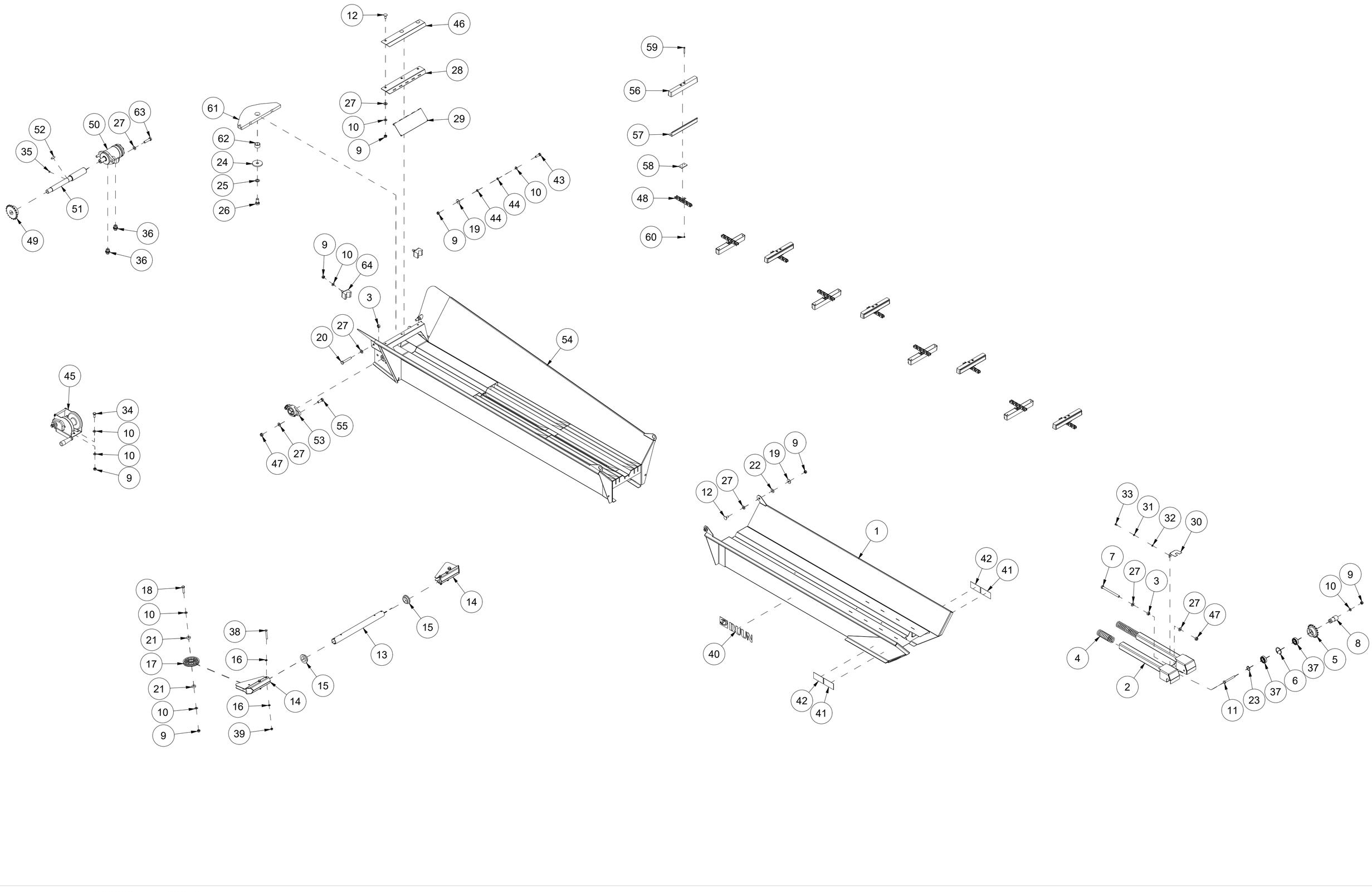

Pos	Qty	Article no	Designation
1	1	41201006	Conveyor belt, upper
2	1	41201027	Chain tensioner
3	3	2481611	Hexagon nut M12 ElZn DIN 934
4	2	2912085	Pressure spring Dt5,5 Di29 L200 St
5	1	41121079	Chain wheel 5/8" Z17 Ø47,0
6	1	2553247	Seeger ring I 47x2,0 DIN 472
7	1	2422370	Hexagon screw M12x150 ElZn 8.8 DIN931
8	1	41201082	Shaft
9	14	2483610	Locking nut M10 ElZn DIN 985
10	17	2531060	Washer M10 ElZn DIN 125
11	1	2422315	Hexagon screw M10x90 ElZn 8.8 DIN 931
12	5	2344330	Locking screw M10x25 ElZn 8.8 DIN 603
13	1	41201033	Tube
14	2	41201019	Pulley holder
15	2	23311032	Plastic bearing Ø39/48x15
16	8	2531047	Washer M8 ElZn DIN 125
17	2	2245011	Pulley, plastic
18	2	2422303	Hexagon screw M10x40 ElZn 8.8 DIN 931
19	3	2533060	Body washer M10 ElZn DIN 9021
20	2	2422362	Hexagon screw M12x75 ElZn 8.8 DIN 931
21	4	41121084	Inlay in pulley
22	2	41151031	Bearing washer
23	1	2553125	Seeger ring A 25x1,2 DIN 471
24	1	25131040	Washer Ø16/66x6
25	1	2534078	Spring washer M16 ElZn DIN 127
26	1	2422485	Hexagon screw M16x30 ElZn 8.8 DIN 933
27	17	2531069	Washer M12 ElZn DIN 125
28	1	41201238	Locking plate
29	1	41201239	Carrier trapdoor
30	1	41201264	Protective plate
31	2	2534039	Spring washer M6 ElZn DIN 127
32	2	2531039	Washer M6 ElZn DIN 125
33	2	2422196	Hexagon screw M6x10 ElZn 8.8 DIN 933
34	3	2422297	Hexagon screw M10x25 ElZn 8.8 DIN 933
35	1	2473236	Threaded pin M8x12 St DIN 914
36	2	2957766	Hexagon nipple GEK BSP 1/2" L12 ED
37	2	2951124	Ball bearing 6005 2RS 25x47x12 DIN 625
38	4	2422259	Hexagon screw M8x60 ElZn 8.8 DIN 931
39	4	2483609	Locking nut M8 ElZn DIN 985
40	1	2935071	Adhesive label Duun H60
41	2	2935034	Adhesive label 90x48 Hanging ribbon
42	2	2935088	Adhesive label 90x48 Hand pinching hazard
43	1	2422301	Hexagon screw M10x35 ElZn 8.8 DIN 933
44	2	41201187	Washer
45	1	2966105	Winch 500 kg with brake and wire
46	1	41201308	Cover plate
47	5	2483611	Locking nut M12 ElZn DIN 985
48	1	2963105	Roller chain 5/8"Sim 504 link galv
49	1	41401029	Chain wheel 19t 5/8"with set screw m8
50	1	2955508	Hydraulic engine 50 ccm
51	1	41311207	Drive shaft
52	1	41311209	Wedge with hole L30
53	1	2954169	Flange bearing UCFL 205 25mm
54	1	41311206	Conveyor belt, lower
55	2	2423350	Hexagon screw M12x35 ElZn 10.9 DIN 933
56	9	41121078	Carrier
57	9	41131090	Carrier plate
58	9	41131091	Nut plate
59	18	2471177	Unbrako cylinder screw M5x40 St 12.9 DIN 912
60	18	2483607	Locking nut M5 ElZn DIN 985
61	1	41311227	Rotating plate
62	1	2245228	Plastic bearing Ø30/34x20
63	2	2422356	Hexagon screw M12x50 ElZn 8.8 DIN 931
64	2	41211252	Rubber damper

010 Sideways conveyor belt VM410

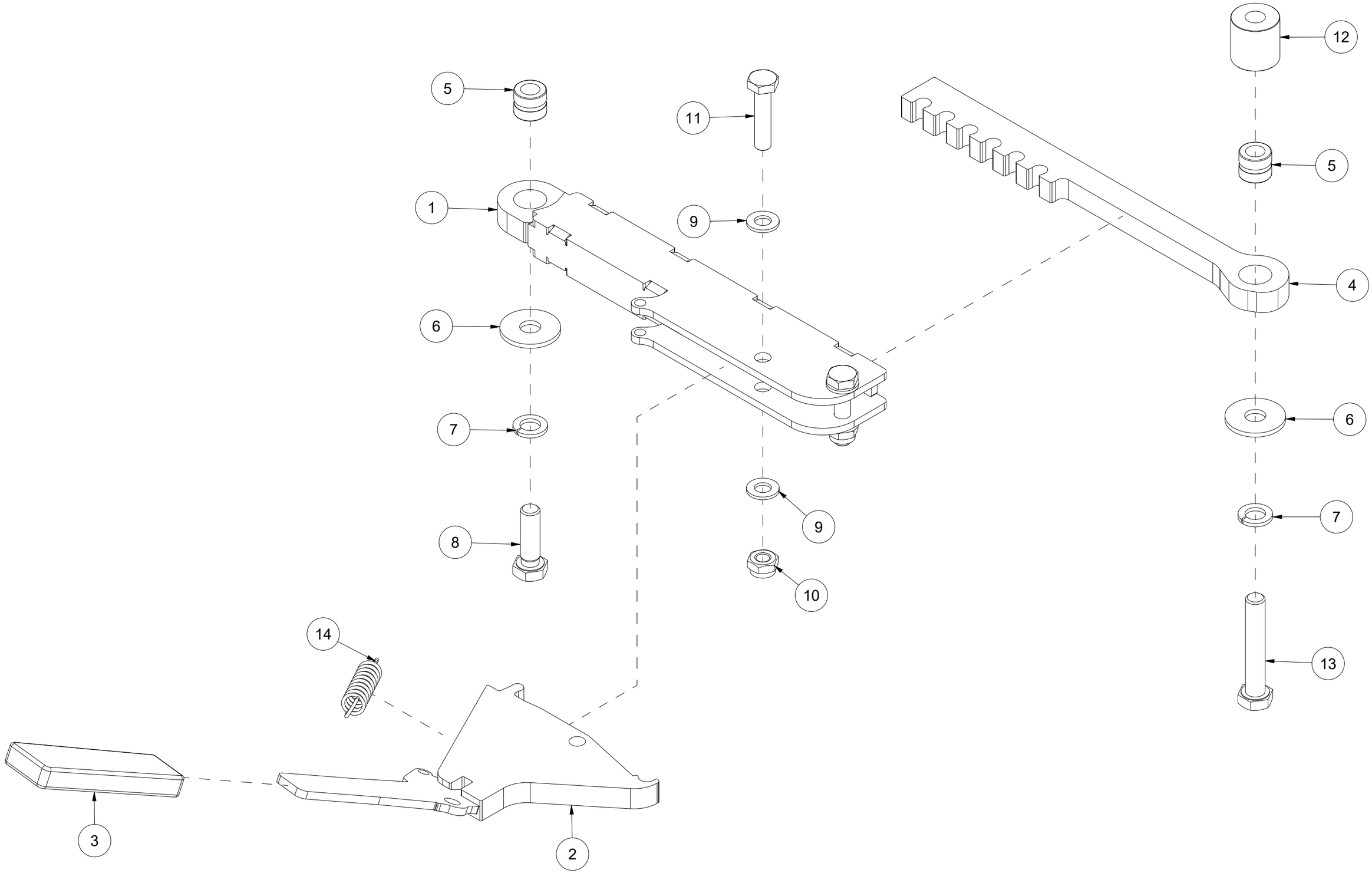

Pos	Qty	Article no	Designation
1	1	41201058	Adjustment mechanism
2	1	41201056	Locking lever
3	1	2245062	Plastic handle
4	1	41201054	Adjustment rod
5	2	41301089	Sliding bearing
6	2	2533090	Body washer M12 ElZn DIN 9021
7	2	2534069	Spring washer M12 ElZn DIN 127
8	1	2422352	Hexagon screw M12x40 ElZn 8.8 DIN 933
9	4	2531060	Washer M10 ElZn DIN 125
10	2	2483610	Locking nut M10 ElZn DIN 985
11	2	2422305	Hexagon screw M10x45 ElZn 8.8 DIN 931
12	1	41311107	Sleeve
13	1	2422361	Hexagon screw M12x70 ElZn 8.8 DIN 931
14	1	41201374	Extension spring Dt2,0 Dy15 L70 St Rød

011 Cover VM410

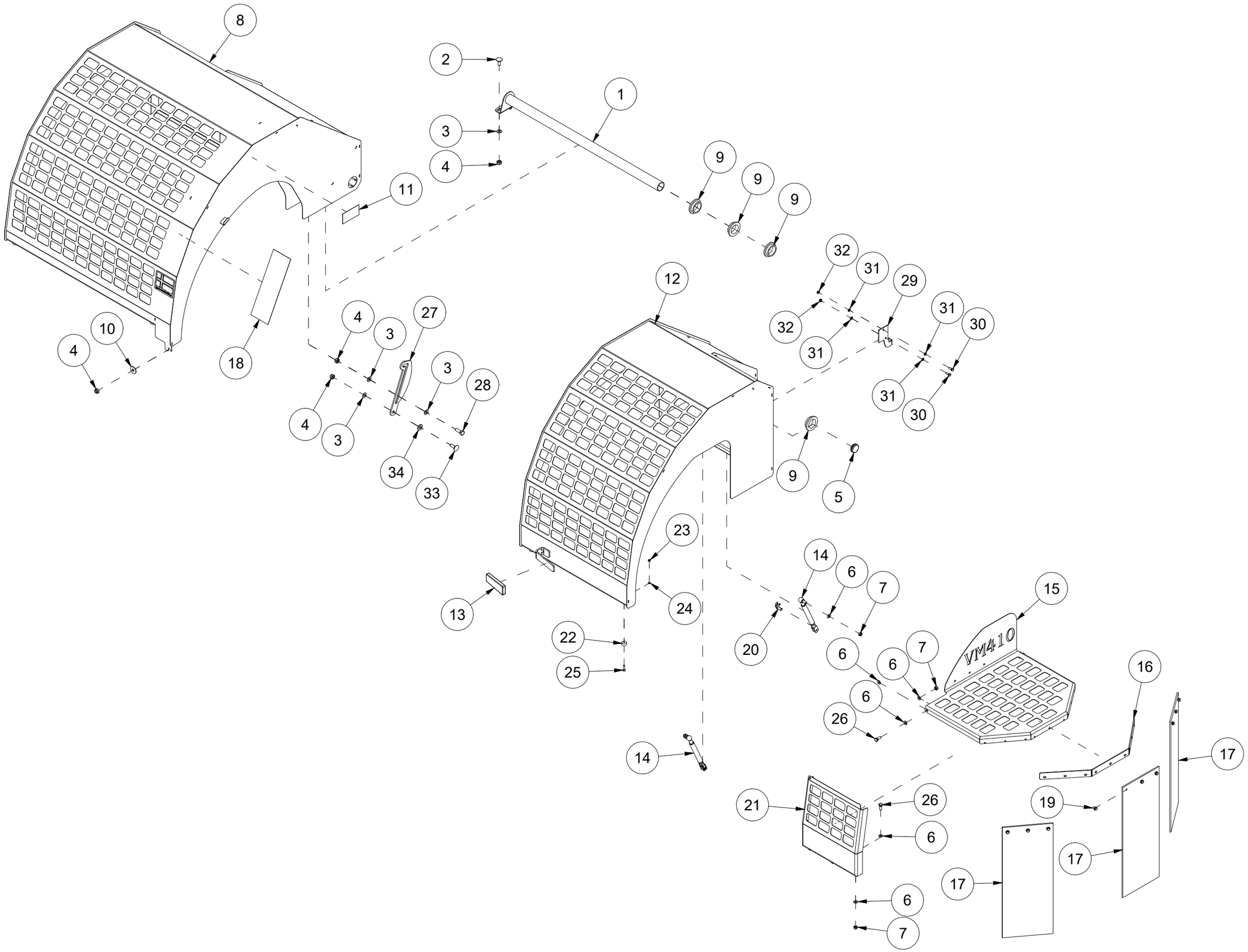

Pos	Qty	Article no	Designation
1	1	41311080	Bearing cover
2	2	2344330	Locking screw M10x25 ElZn 8.8 DIN 603
3	5	2531060	Washer M10 ElZn DIN 125
4	5	2483610	Locking nut M10 ElZn DIN 985
5	2	2245069	End plug Ø35 int.
6	14	2531047	Washer M8 ElZn DIN 125
7	7	2483609	Locking nut M8 ElZn DIN 985
8	1	41331007	Cover 1
9	4	23311032	Plastic bearing Ø39/48x15
10	1	2533060	Body washer M10 ElZn DIN 9021
11	1	2935088	Adhesive label 90x48 Hand pinching hazard
12	1	41331006	Cover 2
13	1	2245062	Plastic handle
14	2	2915112	Gas spring L265 SL80 400N Ball M8 - Fork Ø8
15	1	41331010	Cover 3
16	1	41311112	Clamp plate
17	3	41311086	Curtain 200x525
18	1	2935172	Firewood processor 95x290mm400RPM
19	9	2451196	Hexagon screw with flange M6x10 ElZn 8.8 DIN 6921
20	2	2915150	Bolt to the fork head M8
21	1	41331035	Cover 4
22	4	2225109	Rubber plug ø 20,0mm H-12mm
23	4	2483607	Locking nut M5 ElZn DIN 985
24	4	2531029	Washer M5 ElZn DIN 125
25	4	2477169	Unbrako socket head screw M5x20 ElZn DIN 912
26	5	2422244	Hexagon screw M8x20 ElZn 8.8 DIN 933
27	1	41211082	Stopper
28	1	2422299	Hexagon screw M10x30 ElZn 8.8 DIN 933
29	1	41331008	Safety switch strut
30	2	2422200	Hexagon screw M6x16 ElZn 8.8 DIN 933
31	4	2531039	Washer M6 ElZn DIN 125
32	2	2483608	Locking nut M6 ElZn DIN 985
33	1	2344331	Locking screw M10x30 ElZn 8.8 DIN 603
34	1	2531069	Washer M12 ElZn DIN 125

012 Gearbox VM410

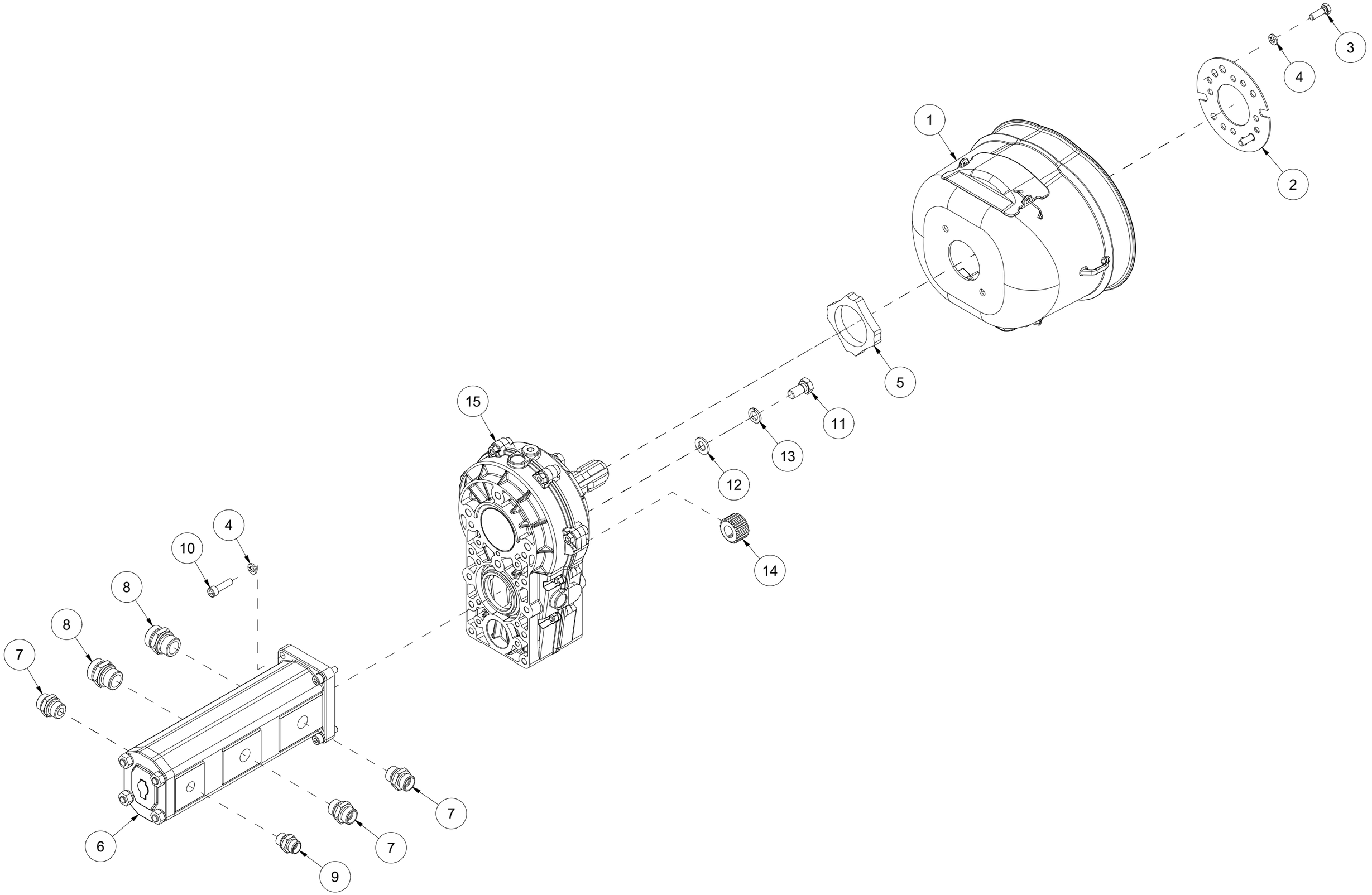

Pos	Qty	Article no	Designation
1	1	41201267	Protective funnel
2	1	31231079	Fixing plate for protective funnel
3	2	2422246	Hexagon screw M8x25 ElZn 8.8 DIN 933
4	6	2534047	Spring washer M8 ElZn DIN 127
5	1	41201266	Protective plate
6	1	2955558	Cog wheel pump trip. 23+18+08
7	3	2957768	Hexagon nipple GEK BSP 1/2" L15 ED
8	2	2957773	Hexagon nipple GEK BSP 3/4" L22 ED
9	1	2957749	Hexagon nipple GEK BSP 3/8" L12 ED
10	4	2477248	Unbrako cylinder screw M8x30 ElZn DIN 912
11	4	2422346	Hexagon screw M12x25 ElZn 8.8 DIN 933
12	4	2531069	Washer M12 ElZn DIN 125
13	4	2534069	Spring washer M12 ElZn DIN 127
14	1	2961200	Splain for gearbox ML52
15	1	2961007	Gearbox 1:3,8 90' MP21

013 Operation console VM410

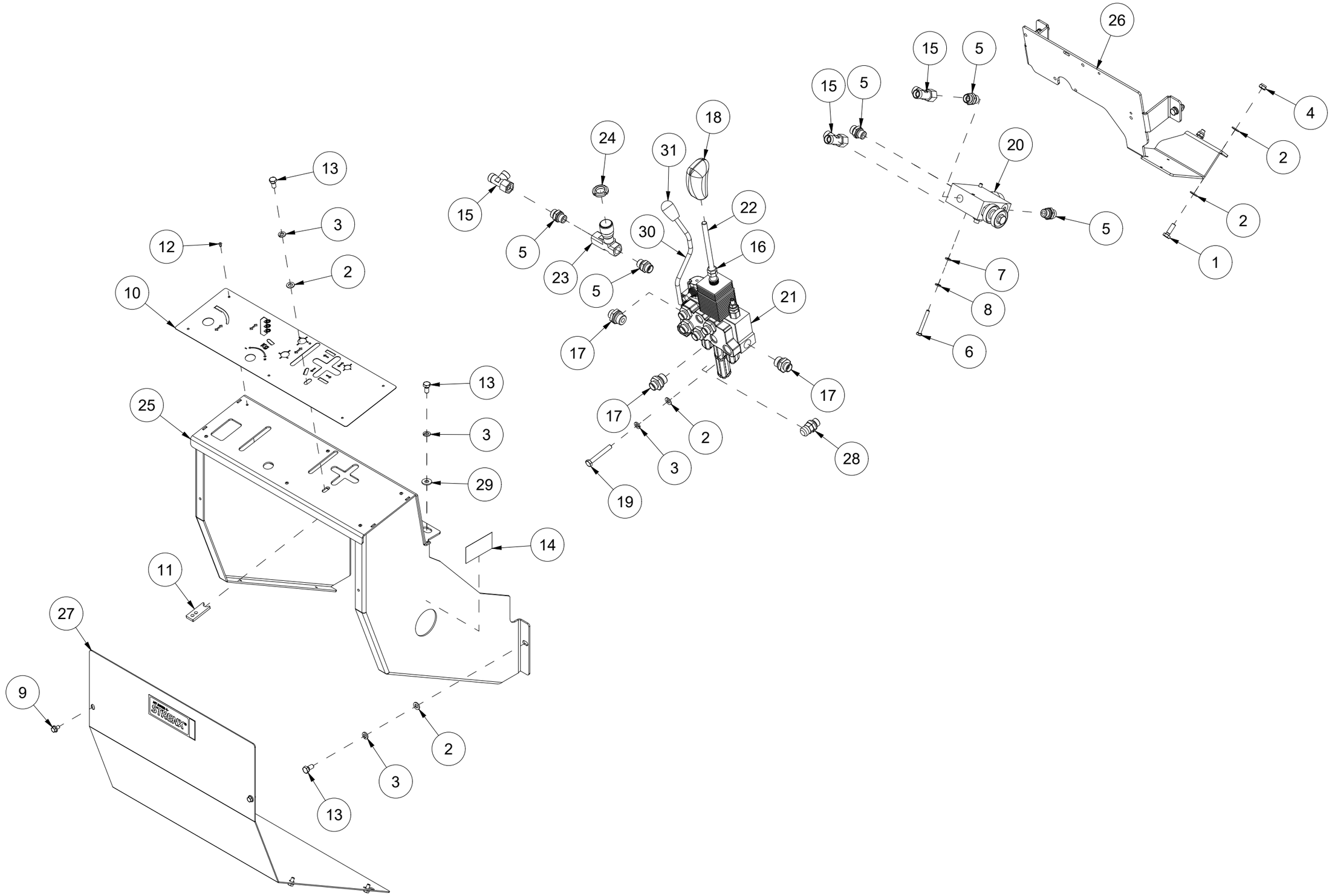

Pos	Qty	Article no	Designation
1	4	2422246	Hexagon screw M8x25 ElZn 8.8 DIN 933
2	13	2531047	Washer M8 ElZn DIN 125
3	9	2534047	Spring washer M8 ElZn DIN 127
4	4	2483609	Locking nut M8 ElZn DIN 985
5	5	2957749	Hexagon nipple GEK BSP 3/8" L12 ED
6	2	2422217	Hexagon screw M6x50 ElZn 8.8 DIN 931
7	2	2531039	Washer M6 ElZn DIN 125
8	2	2534039	Spring washer M6 ElZn DIN 127
9	6	2451196	Hexagon screw with flange M6x10 ElZn 8.8 DIN 6921
10	1	41331012	Symbol plate with knife lift
11	1	41311151	Stop plate
12	6	2511372	Pop rivet
13	5	2422240	Hexagon screw M8x16 ElZn 8.8 DIN 933
14	1	2935036	Adhesive label 75x40 Conveyor speed
15	3	2957723	T-Hexagon nipple EVLK 12L
16	1	2481610	Hexagon nut M10 ElZn DIN 934
17	7	2957766	Hexagon nipple GEK BSP 1/2" L12 ED
18	1	2245046	Handle 1066S D10
19	2	2422259	Hexagon screw M8x60 ElZn 8.8 DIN 931
20	1	2955271	Valve priority setting FPRF 3/8 G
21	1	2955234	Valve BM40/3 ZB GU/JS D1/JS
22	1	41311006	Valve rod
23	1	2955341	Throttle/non-return valve 3/8
24	1	2485615	Panel nut M20x1
25	1	41331009	Control panel
26	1	41331013	Bracket
27	1	41331014	Front cover
28	1	2957953	Minimess 3/8 BSP
29	2	2533051	Body washer Ø8,4/20x2 ElZn
30	1	41311220	Handle
31	1	2245048	Handle M8 SR6408

014 Hydraulic block VM410

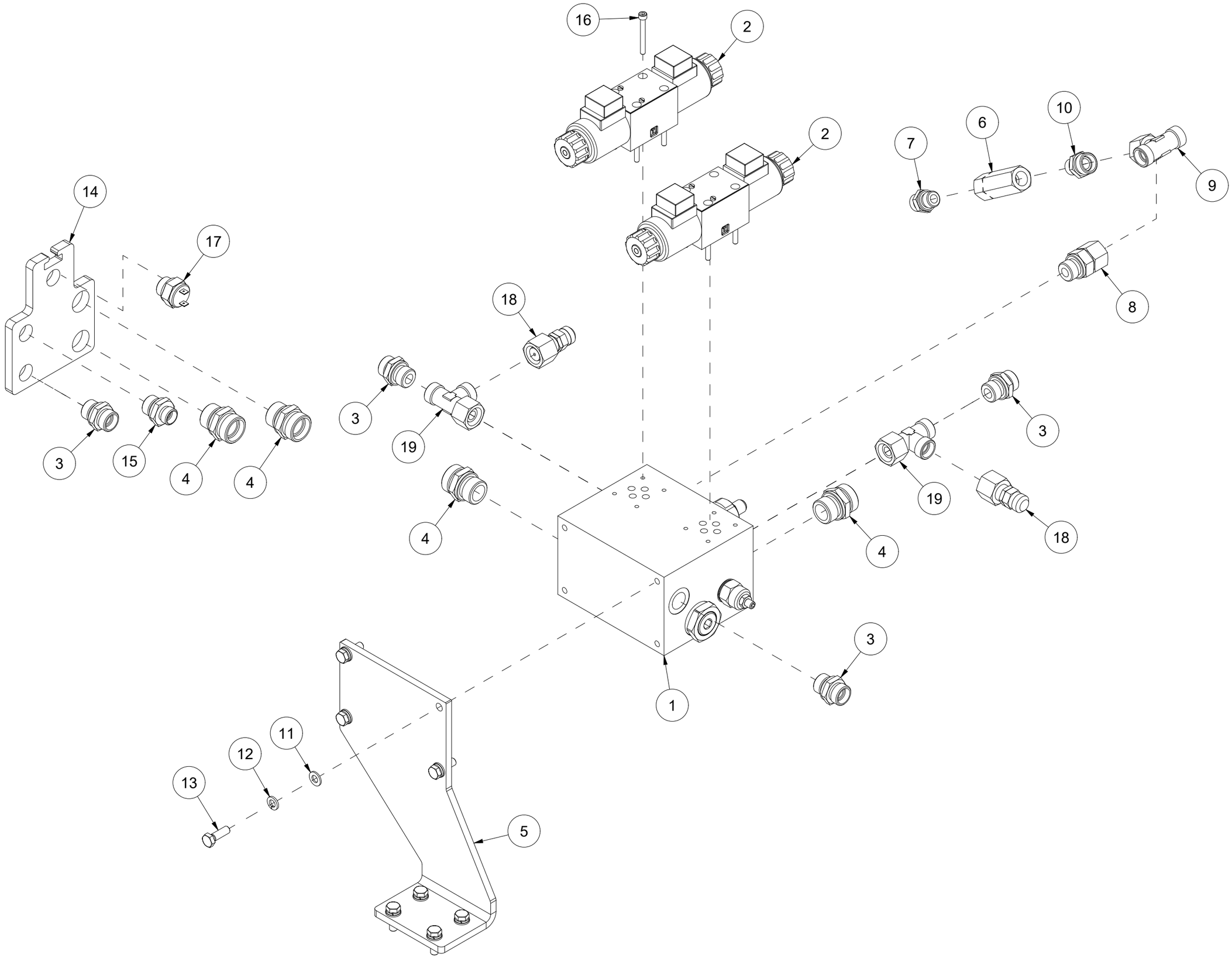

Pos	Qty	Article no	Designation
1	1	2955419	Regenerative Block Duun VM370
2	2	2955251	Valve DHI-0-714/8-X12
3	4	2957768	Hexagon nipple GEK BSP 1/2" L15 ED
4	4	2957773	Hexagon nipple GEK BSP 3/4" L22 ED
5	1	41311095	Hydraulic block bracket
6	1	2955331	Non-return valve 3/8" 0,5Bar
7	1	2957749	Hexagon nipple GEK BSP 3/8" L12 ED
8	1	2957747	Swivel nipple EVGE 15L BSP 1/2" ED
9	1	2957775	T-Hexagon nipple EVTK 15L
10	1	2957750	Hexagon nipple GEK BSP 3/8" L15 ED
11	8	2531047	Washer M8 ElZn DIN 125
12	8	2534047	Spring washer M8 ElZn DIN 127
13	8	2422246	Hexagon screw M8x25 ElZn 8.8 DIN 933
14	1	41311164	Plate
15	1	2957766	Hexagon nipple GEK BSP 1/2" L12 ED
16	8	2477179	Unbrako socket head screw M5x45 ElZn DIN 912
17	1	4233010	Thermostat 80 degrees
18	2	2957956	Minimess DKO 15L
19	2	2957776	T-Hexagon nipple EVLK 15L

015 Cylinder 11 t VM410

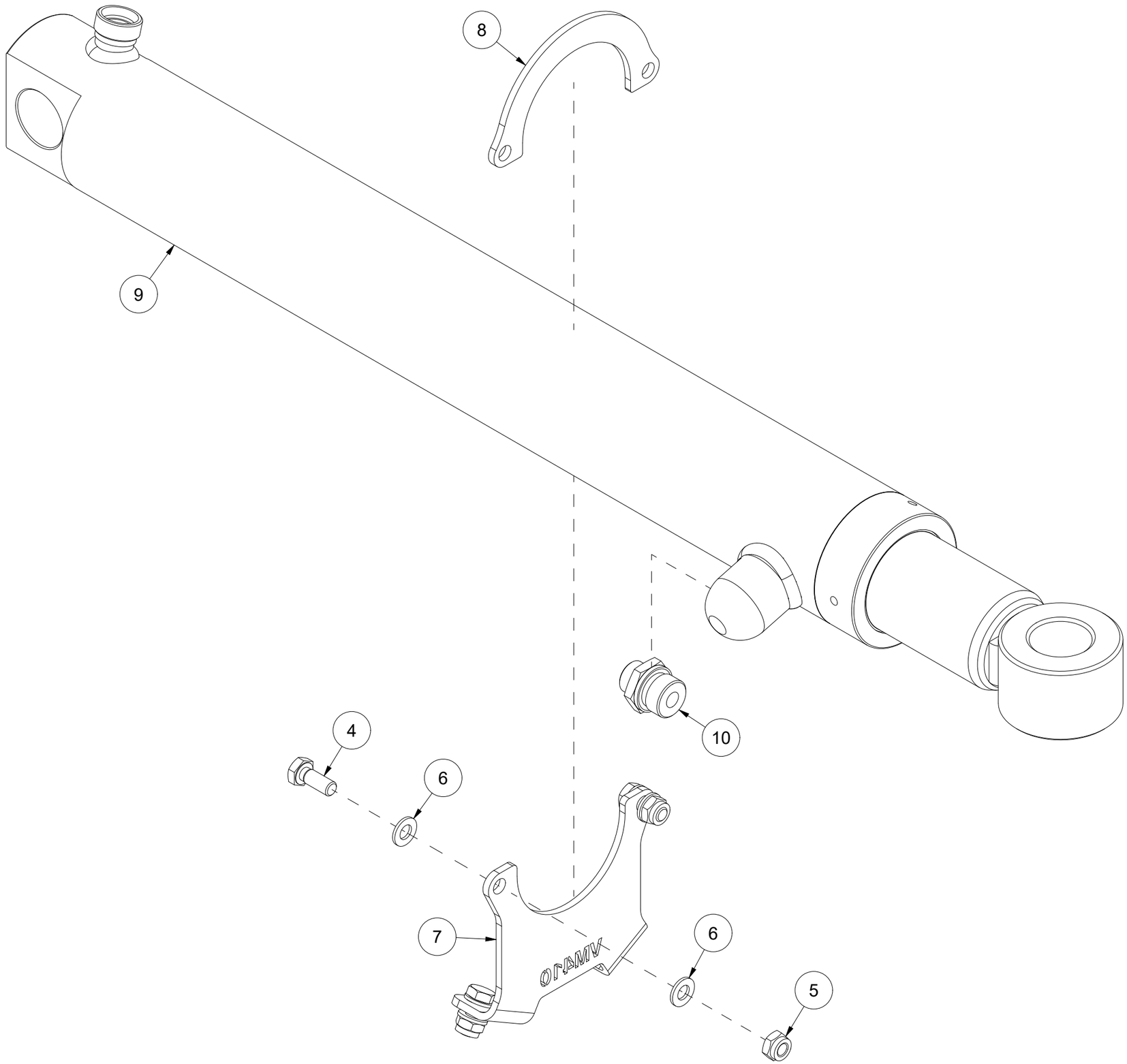

Pos	Qty	Article no	Designation
4	4	2422297	Hexagon screw M10x25 ElZn 8.8 DIN 933
5	4	2483610	Locking nut M10 ElZn DIN 985
6	8	2531060	Washer M10 ElZn DIN 125
7	1	41331015	Support plate Ø80 VM410
8	1	41201074	Upper plate Ø80
9	1	2955010	Cylinder Giubelli C#2610800700580BGA1700
10	1	2957772	Hexagon nipple GEK BSP 3/4" L15 ED

016 4-parts splitting knife VM410

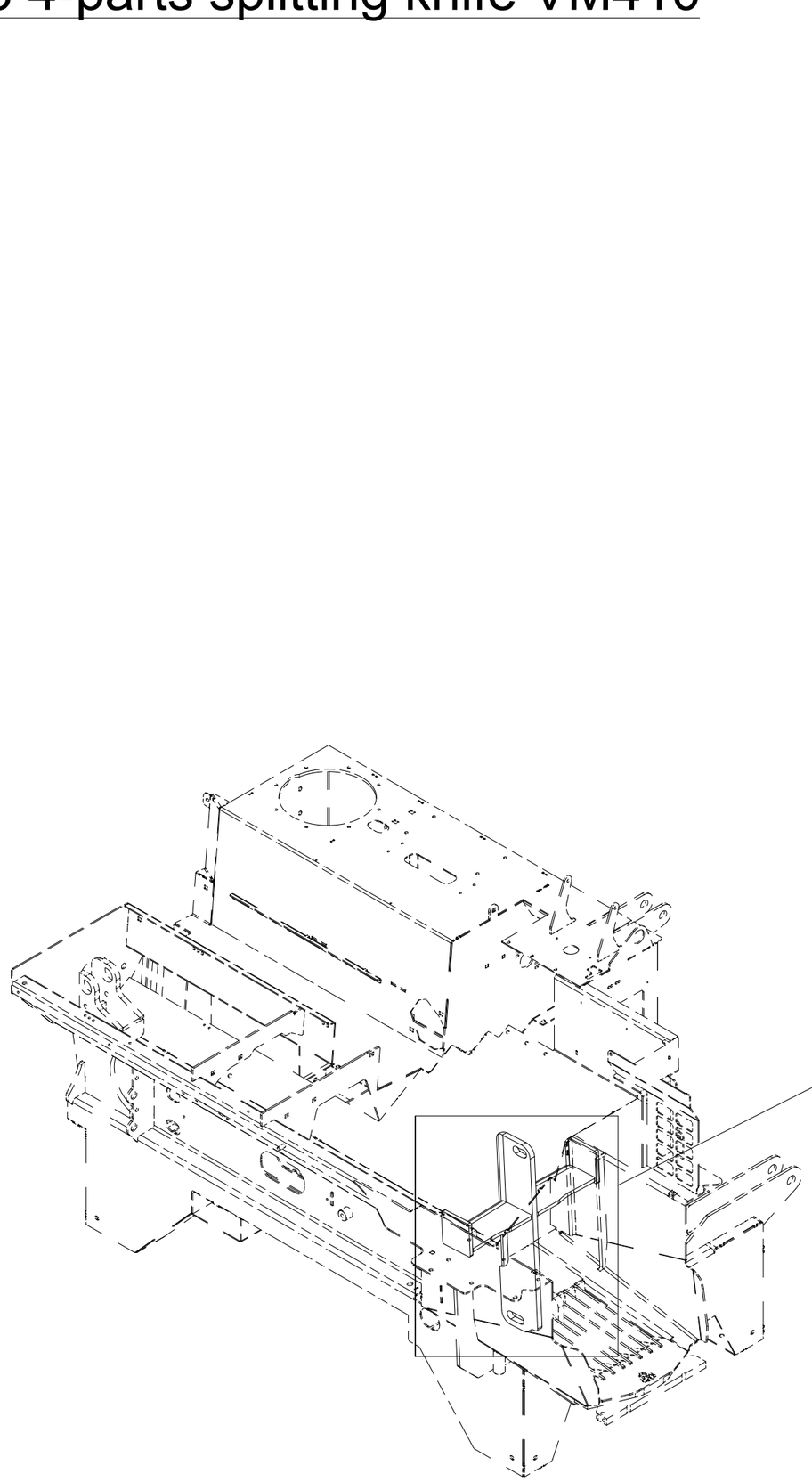

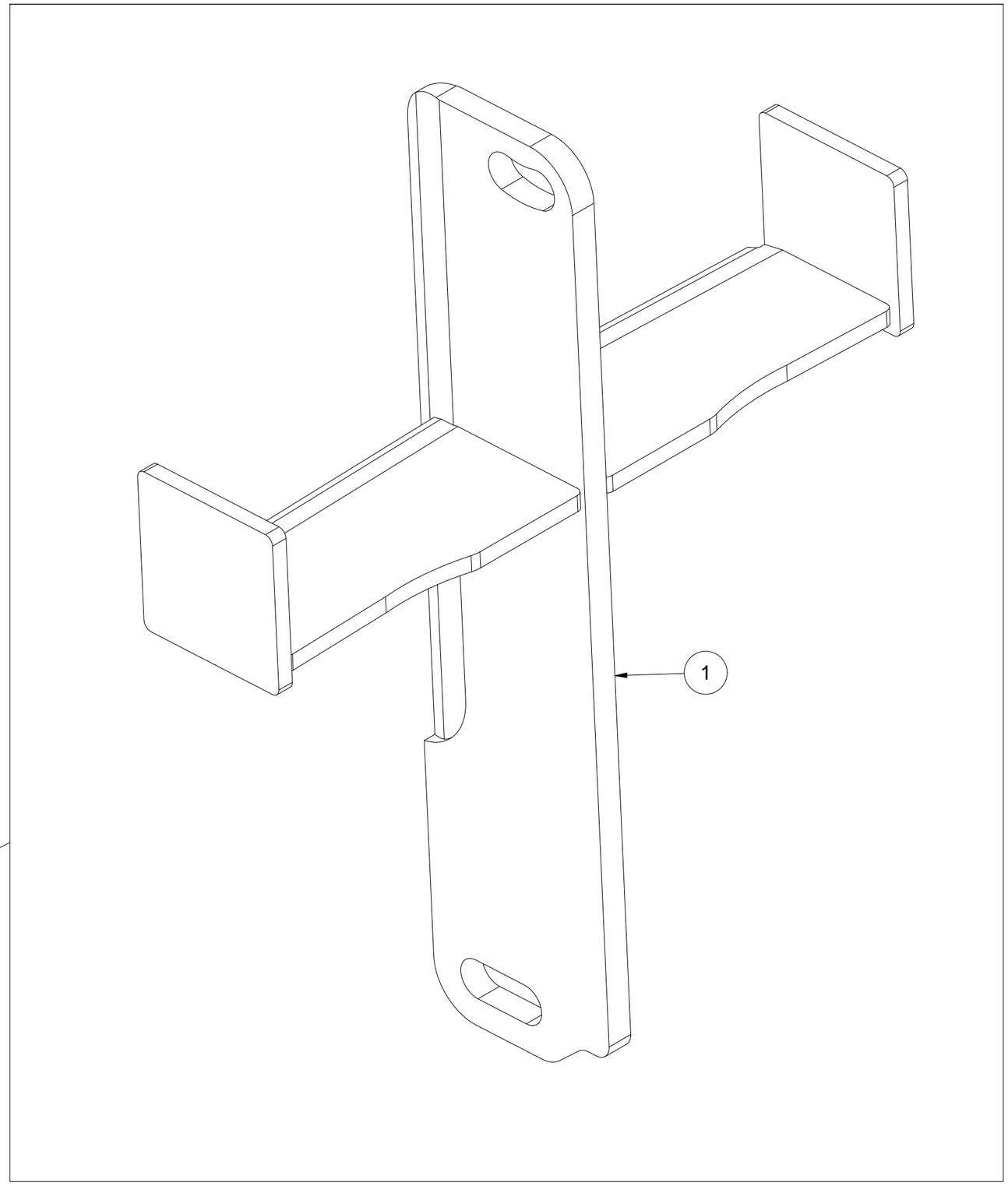

Pos	Qty	Article no	Designation
1	1	41311128	4-parts splitting knife

017 6-parts splitting knife VM410

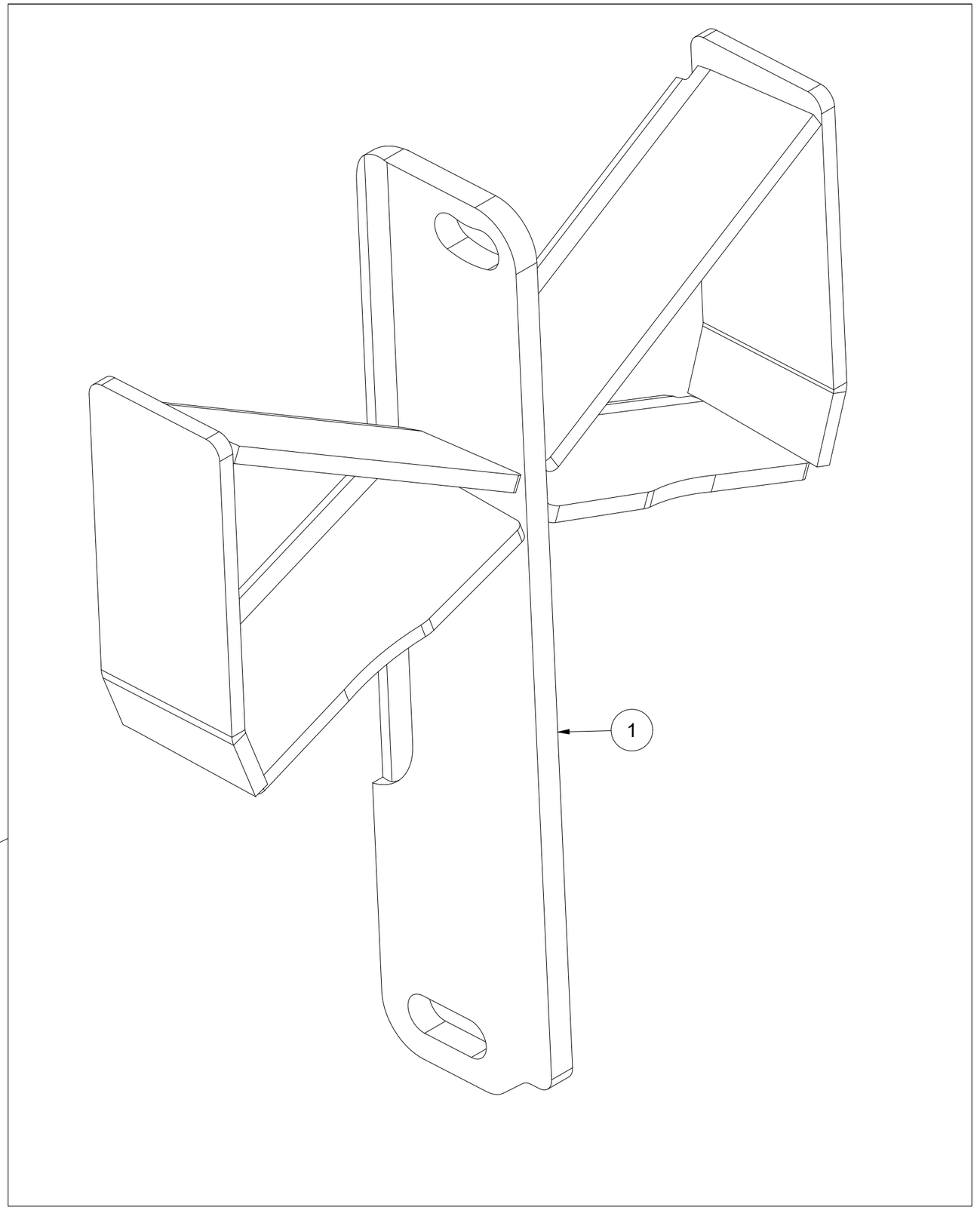

Pos	Qty	Article no	Designation
1	1	41311035	6-parts splitting knife

018 Outlet for log rack VM410

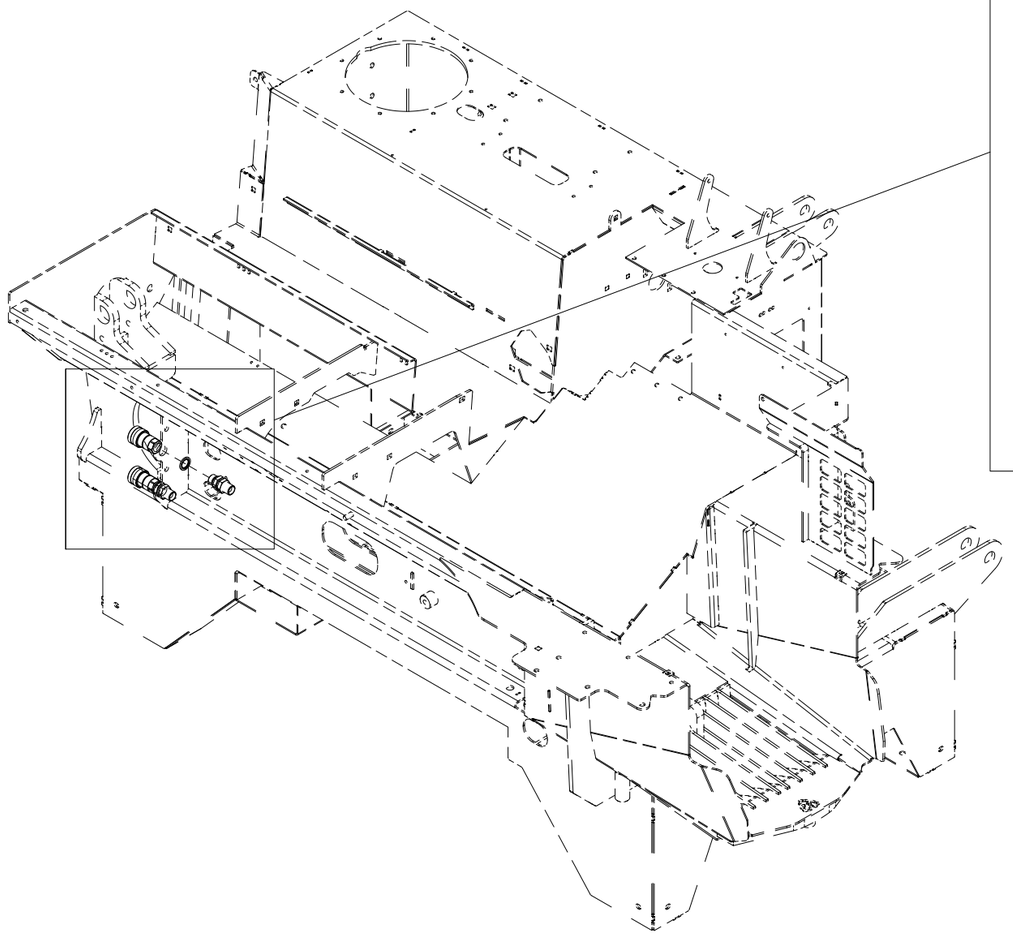

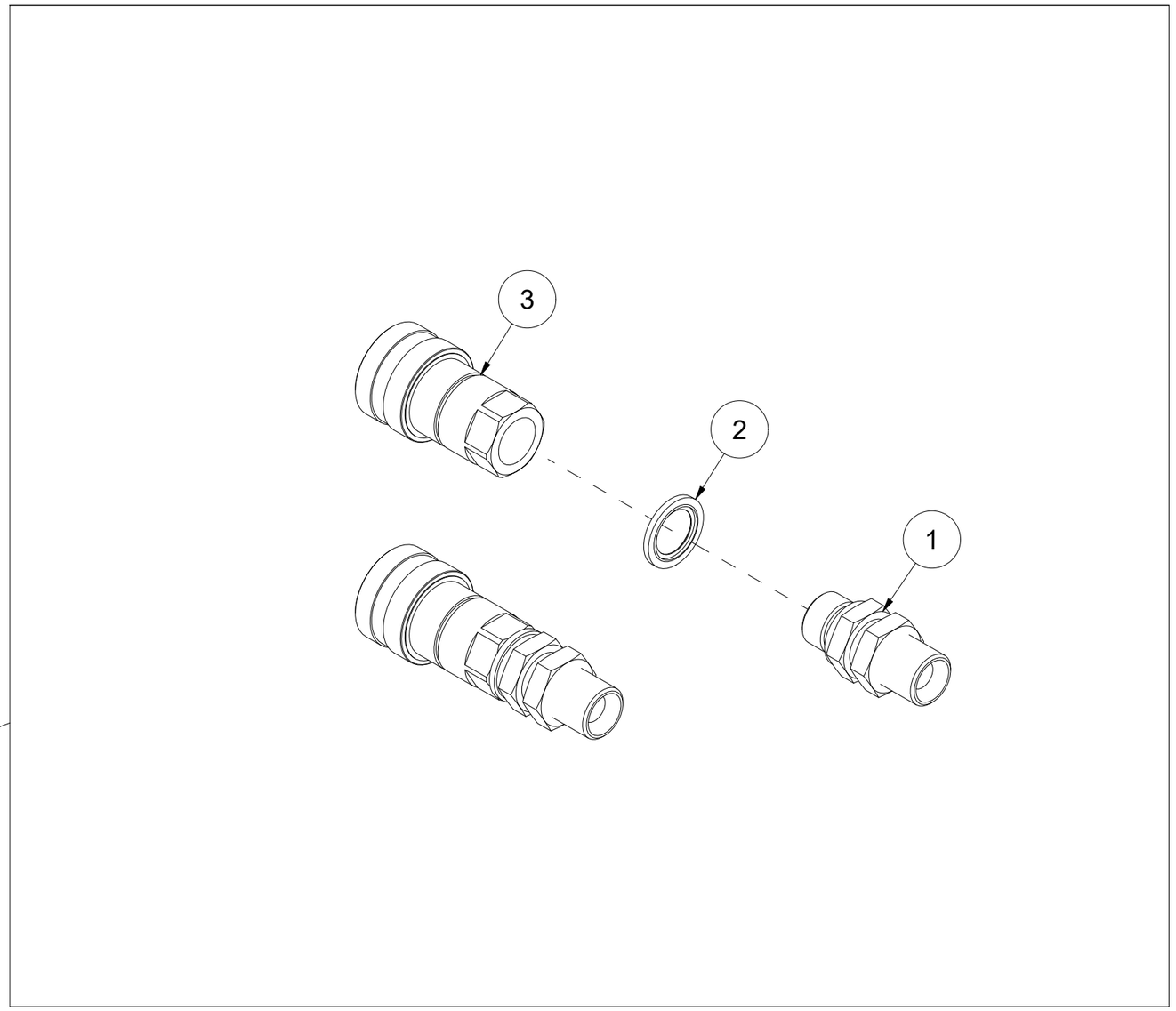

Pos	Qty	Article no	Designation
1	2	2957804	Bulkhead bushing 1/2" BSP
2	2	2957861	Hydraulic gasket 1/2"
3	2	2957858	Quick coupling 1/2" fem.

019 Electronics box VM410

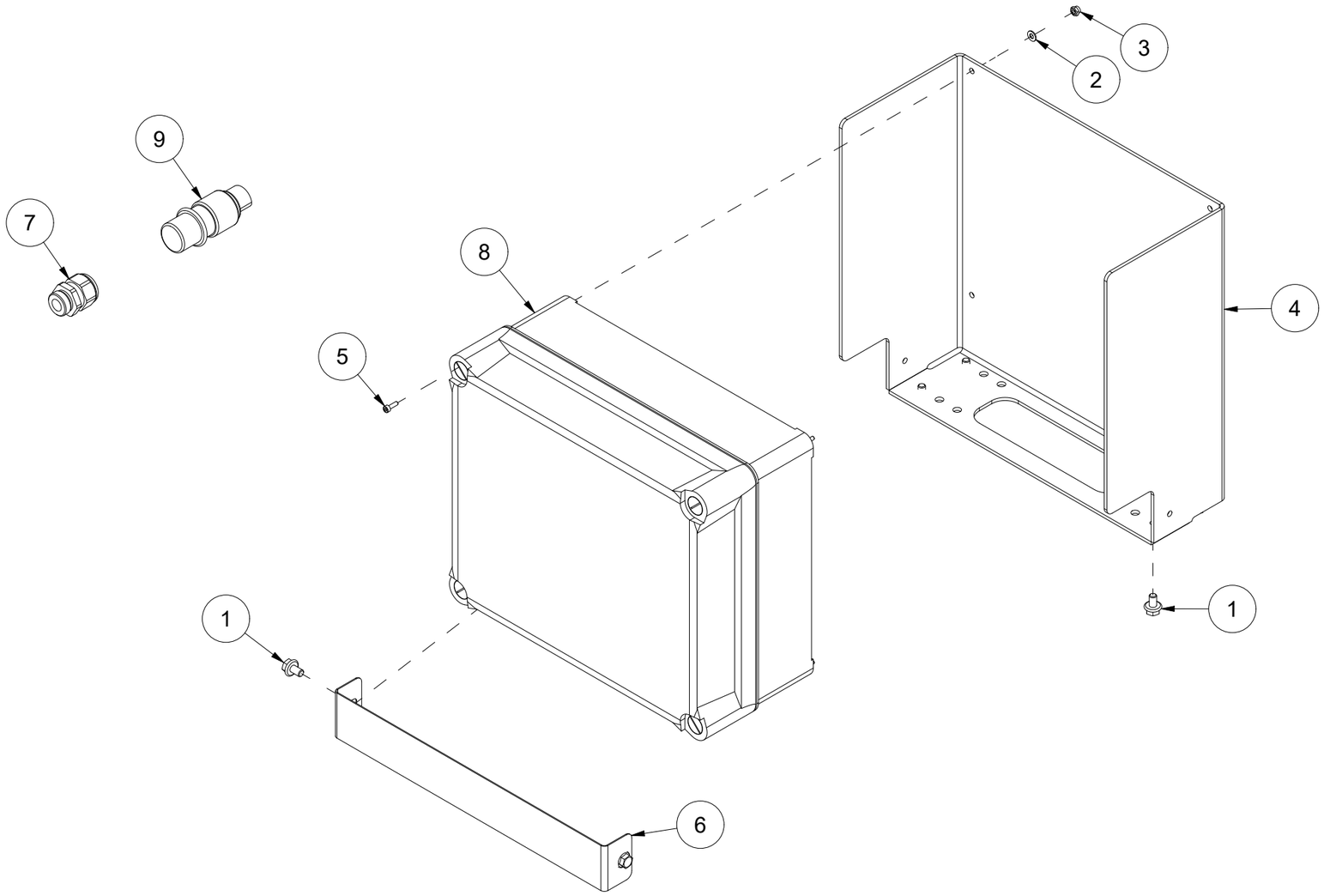



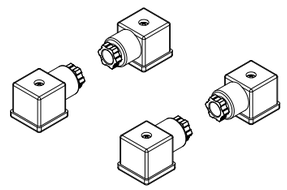

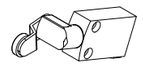



Pos	Qty	Article no	Designation
1	6	2451196	Hexagon screw with flange M6x10 ElZn 8.8 DIN 6921
2	4	2531023	Washer M4 ElZn DIN 125
3	4	2483606	Locking nut M4 ElZn DIN 985
4	1	41311213	Electrical box bracket
5	4	2477103	Unbrako cylinder screw M3x10 ElZn DIN 912
6	1	41311214	Cover
7	1	4127615	Nipple with strain relief M20
8	1	41331016	Junction box compl.
9	1	4321701	Plug connector 3-pin male

020 Support legs VM410

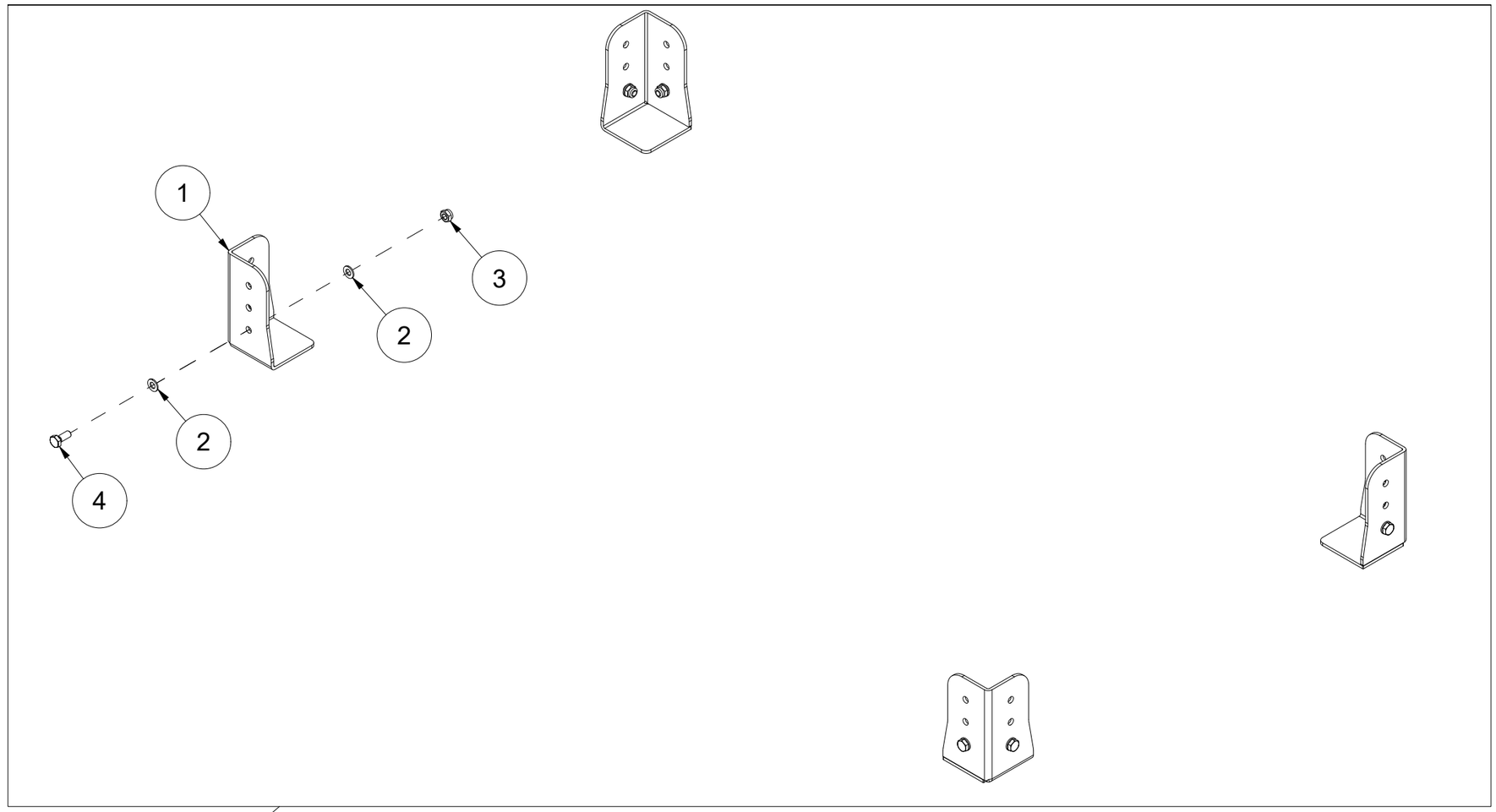

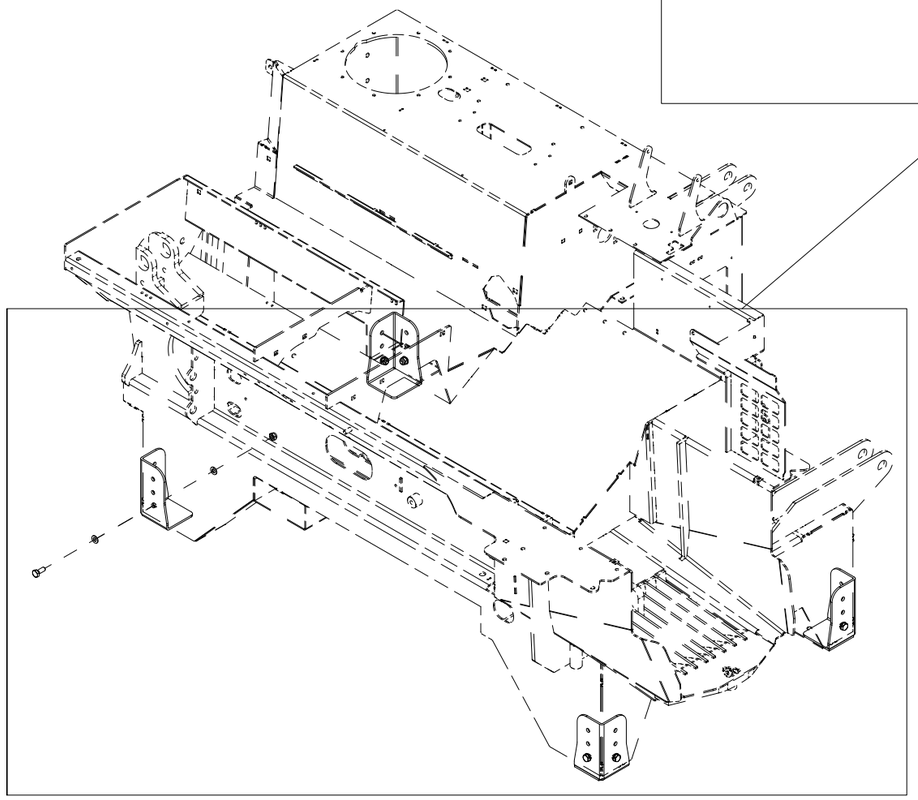

Pos	Qty	Article no	Designation
1	4	41201131	Leg
2	16	2531060	Washer M10 ElZn DIN 125
3	8	2483610	Locking nut M10 ElZn DIN 985
4	8	2422297	Hexagon screw M10x25 ElZn 8.8 DIN 933

021 Oil cooler VM410

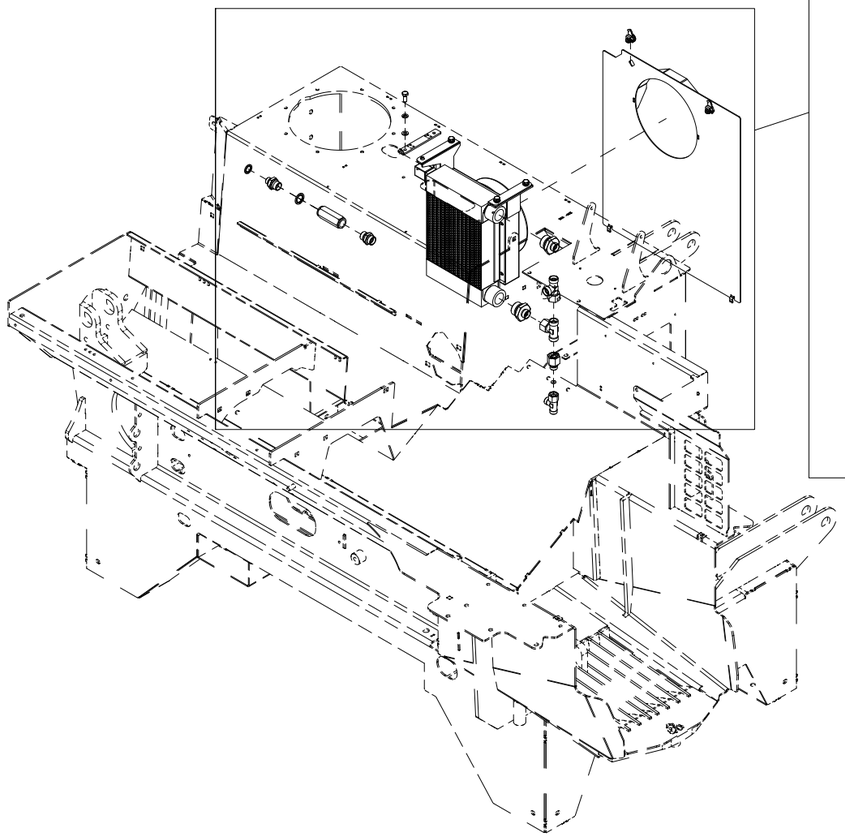

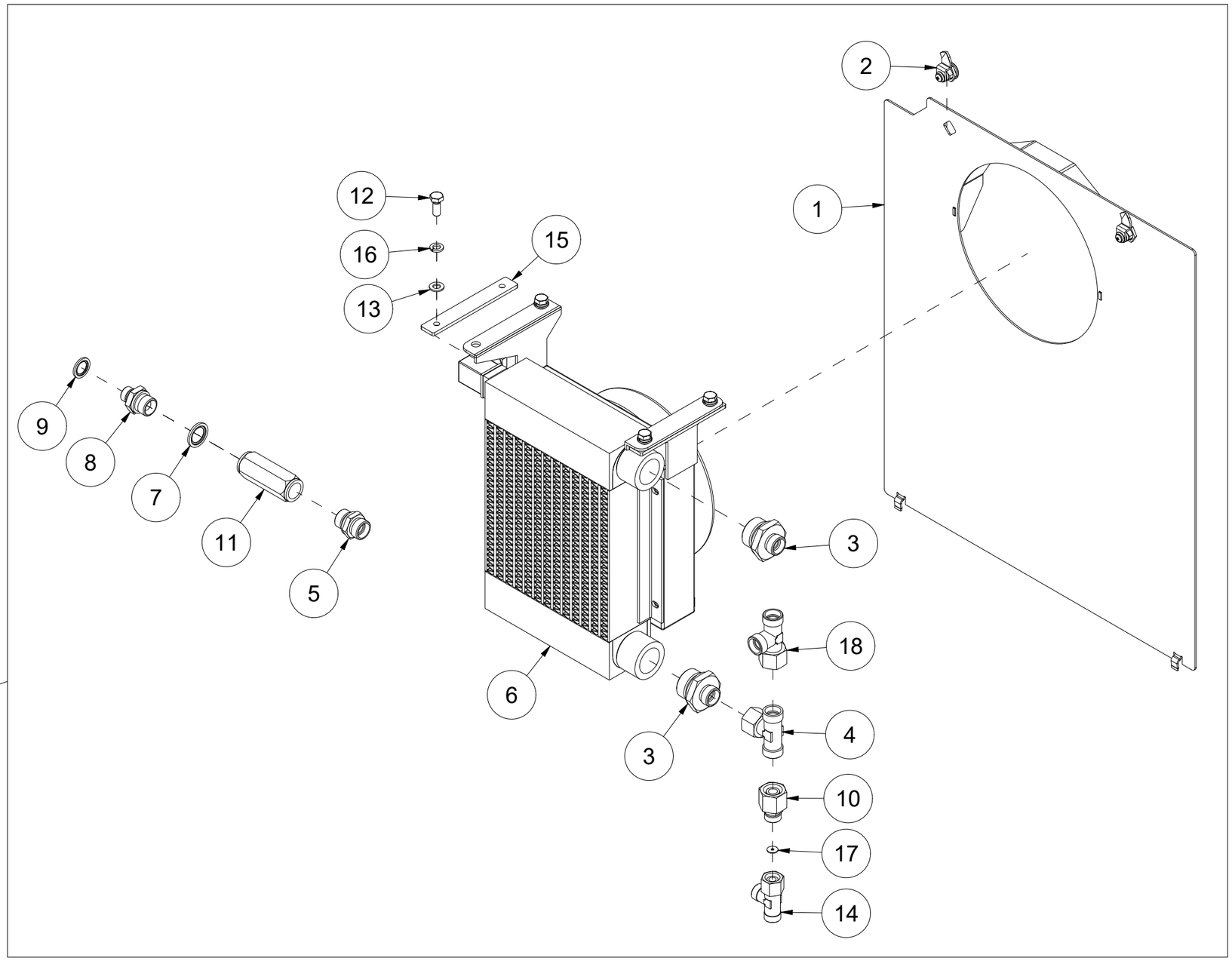

Pos	Qty	Article no	Designation
1	1	41311175	Cover for oil cooler
2	2	2931024	Cross track lock - Euro Lock
3	2	2957780	Hexagon nipple GEK BSP 1" L15 ED
4	1	2957775	T-Hexagon nipple EVTK 15L
5	1	2957768	Hexagon nipple GEK BSP 1/2" L15 ED
6	1	4253052	Oil cooler
7	1	2957861	Hydraulic gasket 1/2"
8	1	2957763	Hexagon nipple BSP 1/2" - 3/8"
9	1	2957890	Hydraulic gasket 3/8"
10	1	2957513	Reducer L15-L12
11	1	2955297	Non-return valve 1/2" 6,0Bar
12	4	2422244	Hexagon screw M8x20 ElZn 8.8 DIN 933
13	4	2531047	Washer M8 ElZn DIN 125
14	1	2957723	T-Hexagon nipple EVLK 12L
15	2	41311195	Nut plate
16	4	2534047	Spring washer M8 ElZn DIN 127
17	1	41311176	Nozzle Ø3,2/12x1
18	1	2957776	T-Hexagon nipple EVLK 15L

022 8-parts splitting knife VM410

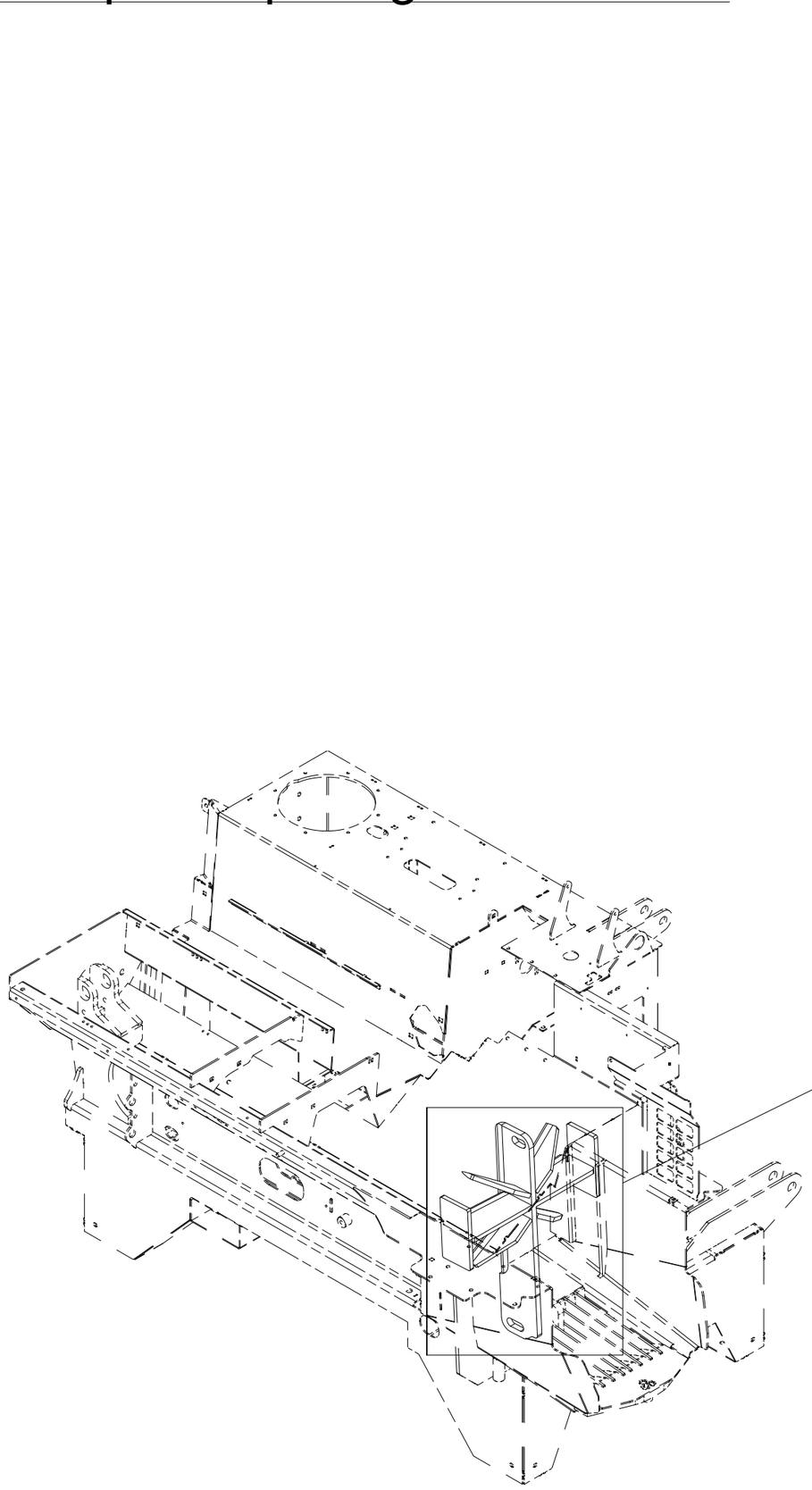

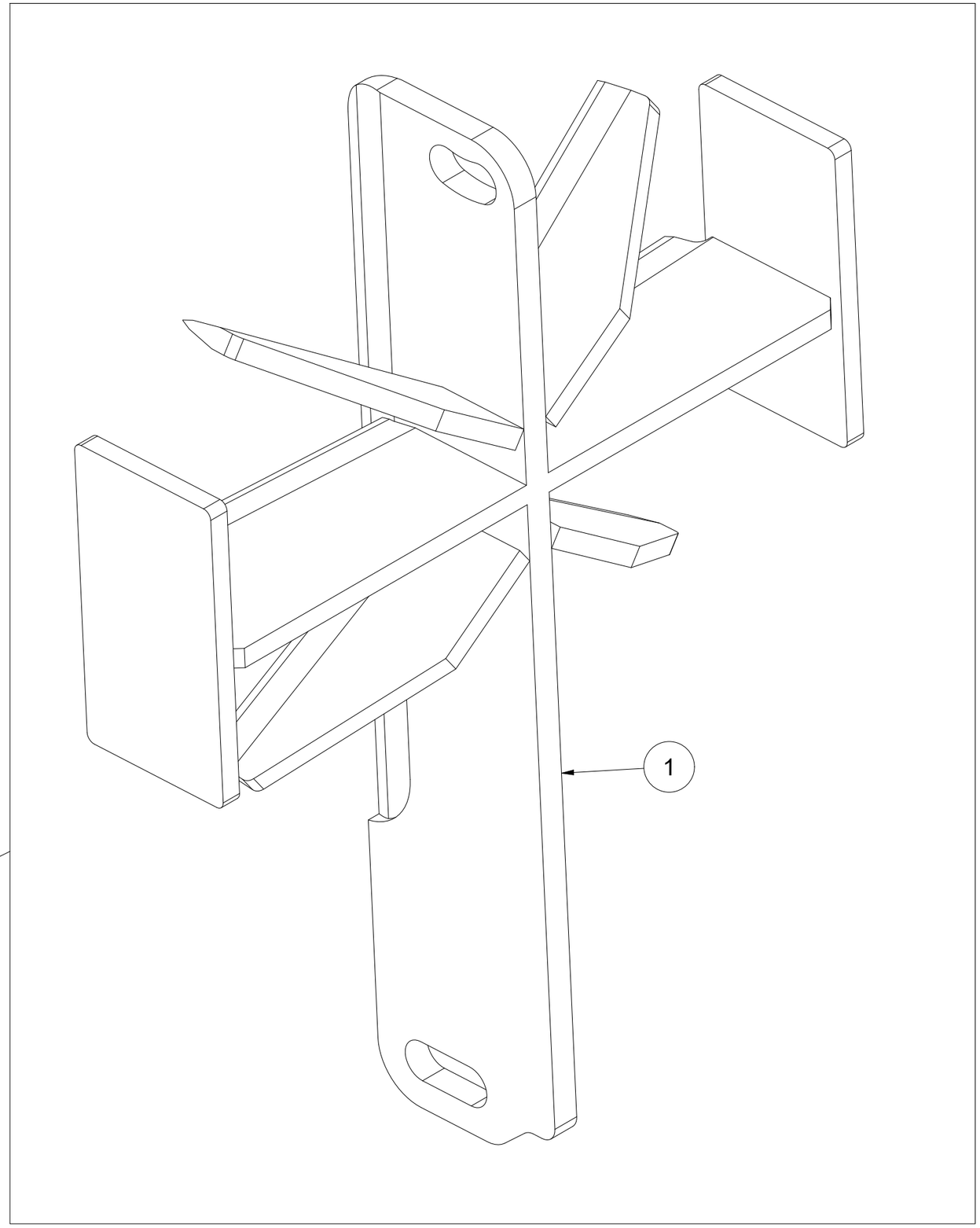

Pos	Qty	Article no	Designation
1	1	41311212	8-parts splitting knife

023 Outlet for step feeder

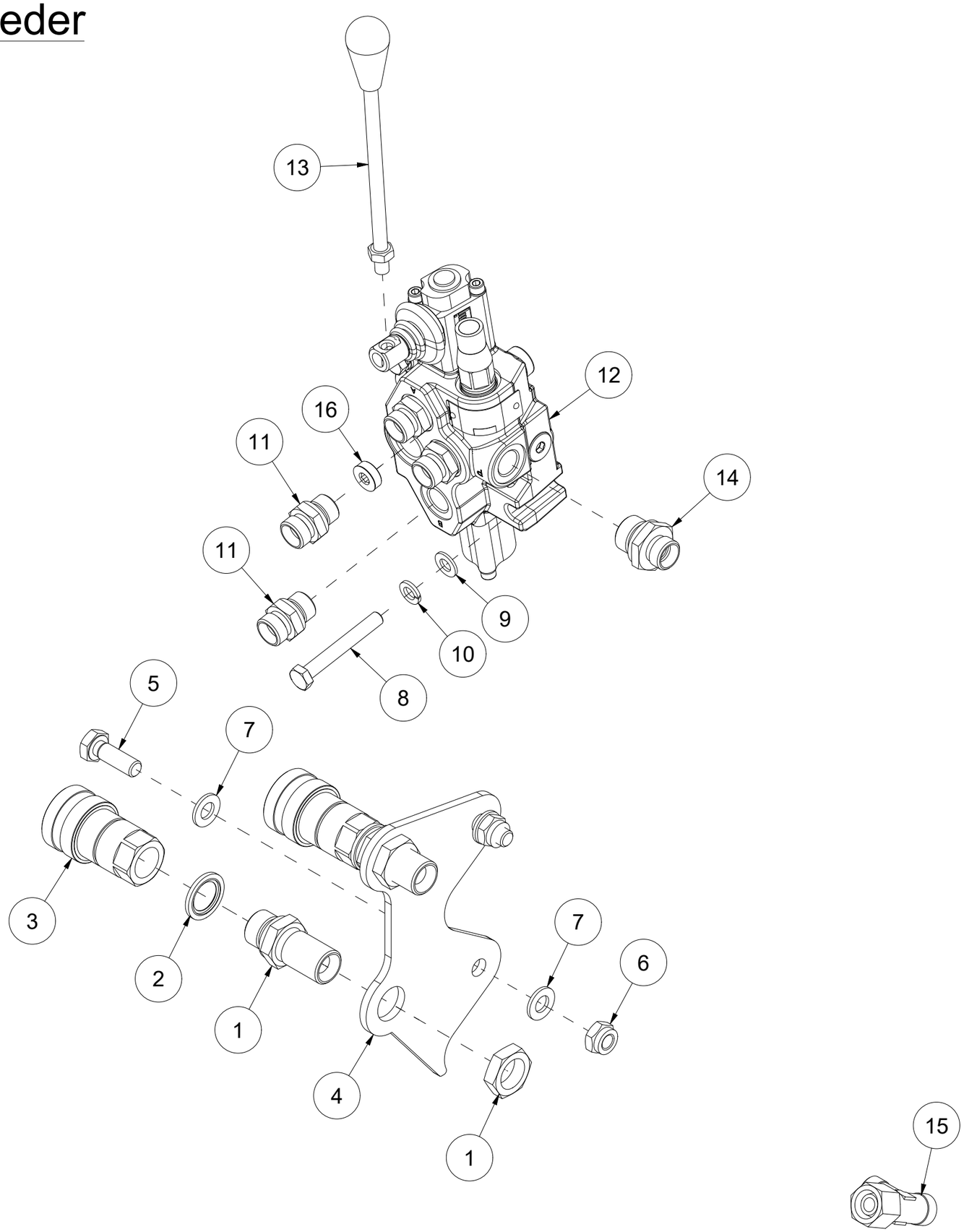

Pos	Qty	Article no	Designation
1	2	2957804	Bulkhead penetration 1/2" BSP
2	2	2957861	Hydraulic gasket 1/2"
3	2	2957858	Quick coupling 1/2" fem.
4	1	41331032	Fastening plate
5	2	2422299	Hexagon screw M10x30 ElZn 8.8 DIN 933
6	2	2483610	Locking nut M10 ElZn DIN 985
7	4	2531060	Washer M10 ElZn DIN 125
8	2	2422259	Hexagon screw M8x60 ElZn 8.8 DIN 931
9	2	2531047	Washer M8 ElZn DIN 125
10	2	2534047	Spring washer M8 ElZn DIN 127
11	4	2957749	Hexagon nipple GEK BSP 3/8" L12 ED
12	1	2955236	Non-return valve 1 flap,, VDM6 A1
13	1	2245037	Handle L205 M8
14	2	2957766	Hexagon nipple GEK BSP 1/2" L12 ED
15	1	2957723	T-hexagon nipple EVLK 12L
16	1	2955237	Washer 3/8-18 NPTF VDM6 A1